CONSTRUCTION PLANS FOR:

BISHOP BOULEVARD / KLEMGARD AVENUE TRAFFIC SIGNAL PROJECT

CONTRACT NO. 11-17

CITY OF PULLMAN, COUNTY OF WHITMAN, STATE OF WASHINGTON

SCHEDULE OF DRAWINGS	
SHEET NO.	TITLE
C1	COVER SHEET
C2	EXISTING CONDITIONS AND DEMOLITION PLAN
C3	BISHOP BOULEVARD WIDENING PLAN AND PROFILE - STA. 5+85 TO STA. 11+00
C4	BISHOP BOULEVARD WIDENING PLAN AND PROFILE - STA. 11+00 TO STA. 14+05
C5	KLEMGARD AVENUE WIDENING PLAN AND PROFILE - STA. 7+82 TO STA. 10+00
C6	INTERSECTION DETAIL
C7	SIGNING AND STRIPING PLAN
T1	TRAFFIC SIGNAL PLAN
T2	TRAFFIC SIGNAL WIRING PLAN
T3	TRAFFIC SIGNAL WIRING DETAILS
T4	TRAFFIC SIGNAL POLE SCHEDULE
T5	POLE FOUNDATION DETAILS

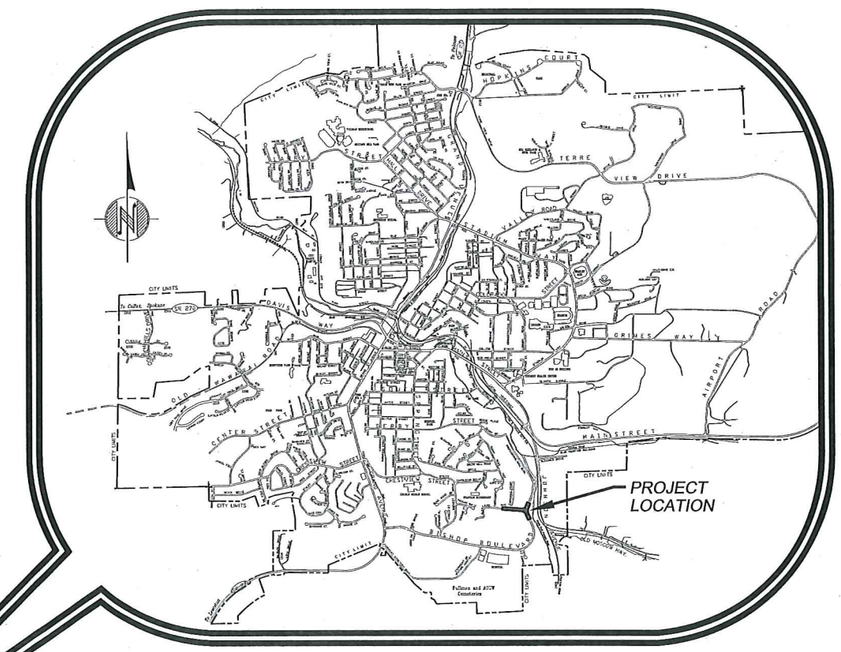

LOCATION MAP

WASHINGTON STATE

VICINITY MAP

Taylor Engineering, Inc.
Civil Design and Land Planning
245 E. Main St.
Pullman, Washington 99163
(509) 334-5115 FAX (509) 334-5956

MORRISON MAIERLE, INC.
ENGINEERS • SURVEYORS • PLANNERS • SCIENTISTS

REVIEWED & APPROVED FOR CONSTRUCTION BY DEPARTMENT OF PUBLIC WORKS ENGINEERING DEPARTMENT – CITY OF PULLMAN, WASHINGTON

APPROVED BY: Kevin Gardner 10/28/14
DIRECTOR OF PUBLIC WORKS DATE

RONALD G. FAY STATE OF WASHINGTON 27622 REGISTERED PROFESSIONAL ENGINEER 4/4/14

KLEMGARD AVE. AND BISHOP BLVD.	GENERAL
COVER SHEET	SHEET C1

11001P-(1)COVER.dwg

UNDERGROUND SERVICE ALERT
ONE-CALL NUMBER
811
CALL TWO BUSINESS DAYS BEFORE YOU DIG

LEGEND

- RIGHT OF WAY LINE
- 2375 MAJOR CONTOUR
- 2371 MINOR CONTOUR
- CENTERLINE
- SS SANITARY SEWER
- SD STORM SEWER
- W WATER
- BP BURIED POWER
- G GAS
- B/TEL BURIED TELEPHONE
- CURB AND GUTTER
- EDGE OF ASPHALT
- ROAD STRIPING
- CONCRETE
- EXIST. BUILDING
- CONIFEROUS TREE
- DECIDUOUS TREE
- SHRUB
- BOULDER ROCK
- HANDI-CAP RAMP
- BOLLARD
- SIGN
- PARKING LOT LIGHT POLE
- STREET LIGHT POLE
- TRAFFIC ARROW SYMBOL
- STORM MANHOLE
- SANITARY SEWER MANHOLE
- C.B. CATCH-BASIN
- WATER METER
- CV CONTROL VALVE
- WATER VALVE
- FIRE HYDRANT
- POWER TRANSFORMER
- UT UTILITY VAULT
- POWER/TELEPHONE POLE
- ELECTRIC METER
- JUNCTION BOX
- GV TELEPHONE RISER
- GAS VALVE
- WP GAS WITNESS POST
- GAS METER
- TEMPORARY BENCH MARK
- MONUMENT- IN CASE
- PROPERTY CORNER- FOUND

ABBREVIATION LIST

CONIF.	CONIFEROUS
DEC.	DECIDUOUS
FH	FIRE HYDRANT
IRCV	IRRIGATION CONTROL VALVE
LP	LIGHT POLE
UT	UTILITY MANHOLE
MH	MANHOLE
SDMH	STORM MANHOLE
SMH	SEWER MANHOLE
WV	WATER VALVE
TW	TOP OF WALL
BW	BOTTOM OF WALL

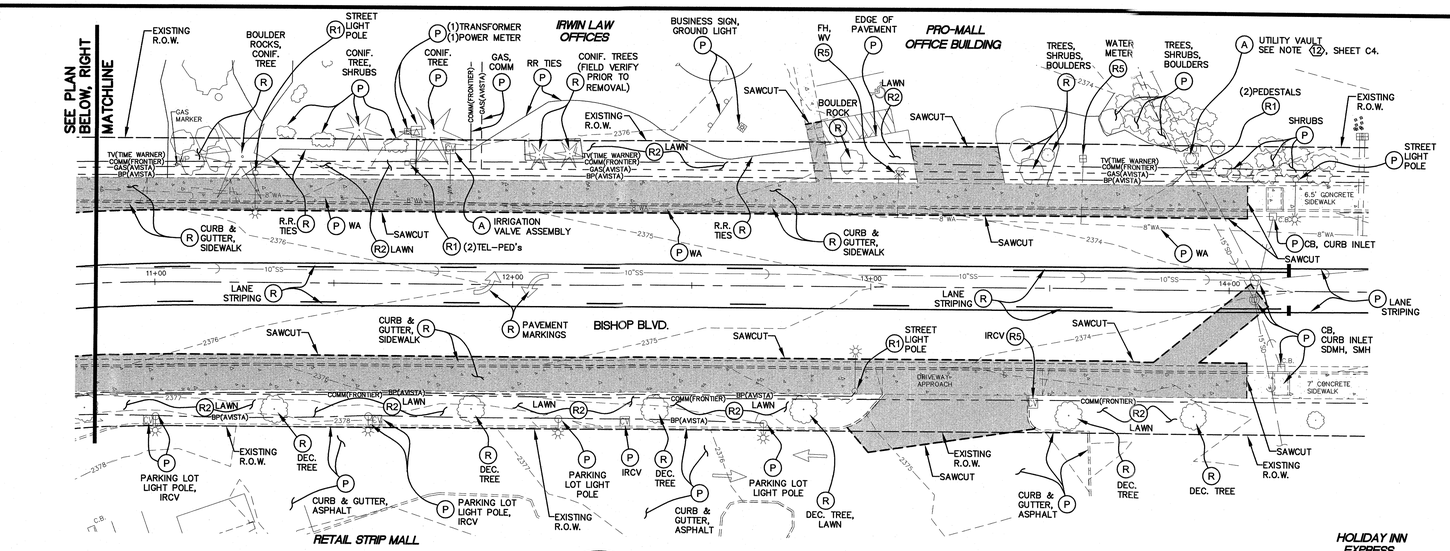

DEMOLITION / REMOVAL LEGEND

- (P) CONTRACTOR SHALL PROTECT AND MAINTAIN IN PLACE.
- (R) CONTRACTOR SHALL REMOVE AND DISPOSE OF LEGALLY OFF-SITE
- (R1) CONTRACTOR SHALL COORDINATE WITH FRANCHISE UTILITY PURVEYOR FOR REMOVAL/RELOCATION/ADJUSTMENT
- (R2) CONTRACTOR SHALL REMOVE EXISTING LAWN/DECORATIVE LANDSCAPE ROCK AND RE-SHAPE GROUND TO MATCH NEW BACK OF SIDEWALK, AS NEEDED. REPLACE WITH NEW LAWN/DECORATIVE LANDSCAPE ROCK AS DIRECTED BY ENGINEER.
- (R3) CONTRACTOR SHALL SALVAGE SIGN BLADES/PLATES. REMOVE EXISTING POLE AND CONSTRUCT NEW POLE WITH EXISTING SIGNS. SEE SIGNING AND STRIPING PLAN.
- (R4) CONTRACTOR SHALL REMOVE EXISTING BUS SHELTER FROM CONCRETE PAD, REMOVE EXISTING PAD. CONSTRUCT NEW CONCRETE PAD WITH EXISTING BUS SHELTER. SEE SHEET C3.
- (R5) CONTRACTOR SHALL REMOVE AND RELOCATE EXISTING WATER METER, IRRIGATION METER, CONTROL VALVES, FIRE HYDRANTS TO BEHIND NEW SIDEWALK. PROVIDE ALL FITTINGS, PIPE, RESTRAINTS AND APPURTENANCES.
- (A) ADJUST STRUCTURE TO NEW FINISH GRADE.
- (A1) EXISTING SURVEY MONUMENTS/PROPERTY CORNERS SHALL BE MONUMENTED AND ADJUSTED BY OTHERS.

DEMOLITION / REMOVAL LEGEND

- (R6) CONTRACTOR SHALL REMOVE AND RELOCATE HOLIDAY INN ELECTRIC MONUMENT SIGN "IN-KIND" TO BEHIND NEW SIDEWALK. EXACT LOCATION TO BE DETERMINED BY CITY.
- (R7) CONTRACTOR SHALL REMOVE AND RE-CONSTRUCT PARKING LOT LIGHT POLE "IN-KIND". SEE ELECTRICAL TECHNICAL SPECIFICATIONS AND TRAFFIC SIGNAL PLANS FOR ADDITIONAL INFORMATION.

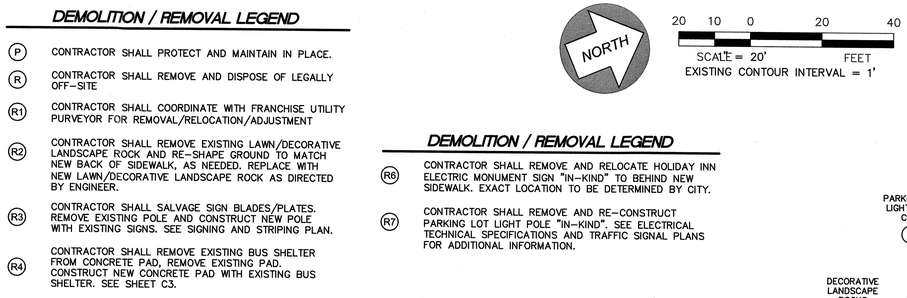

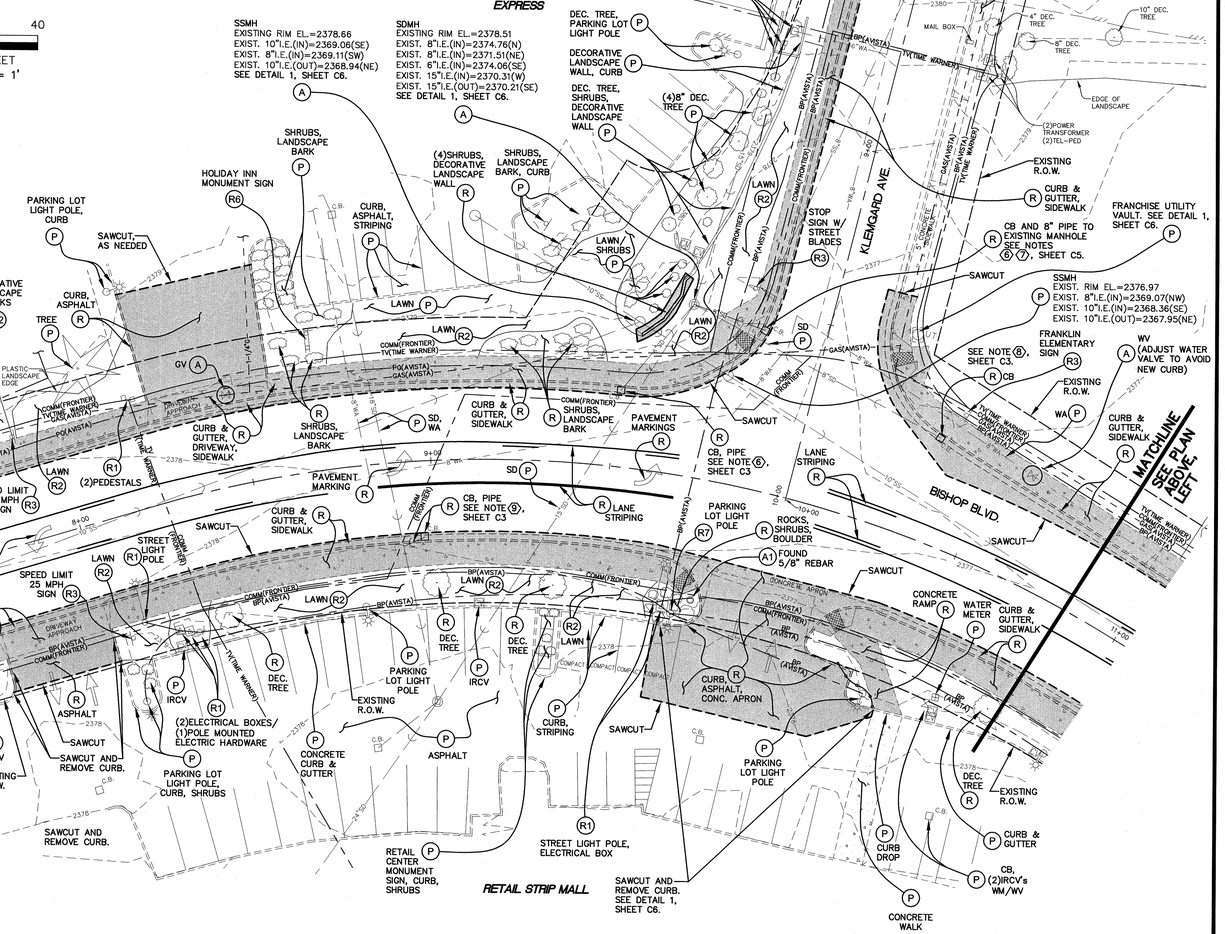

No.	Date	By	Ckd.	Appr.	Revisions

Drawn	DJJ	3/2014
Designed	RGP	3/2014
Checked By	TKS/RGP	3/2014

RONALD G. PAGE — STATE OF WASHINGTON — 21922 — REGISTERED PROFESSIONAL ENGINEER — 4/30/14

Taylor Engineering, Inc.
Civil Design and Land Planning
245 E. Main St.
Pullman, Washington 99163
(509) 334-5115 FAX (509) 334-5956

CITY OF PULLMAN, WASHINGTON
ENGINEERING DIVISION

SCALE
HORIZ. 1"=20'
VERT. N/A

KLEMGARD AVE. AND BISHOP BLVD.

ROADWAY

EXISTING CONDITIONS AND DEMOLITION PLAN

SHEET C2

11001P-EXIST-DEMO.dwg

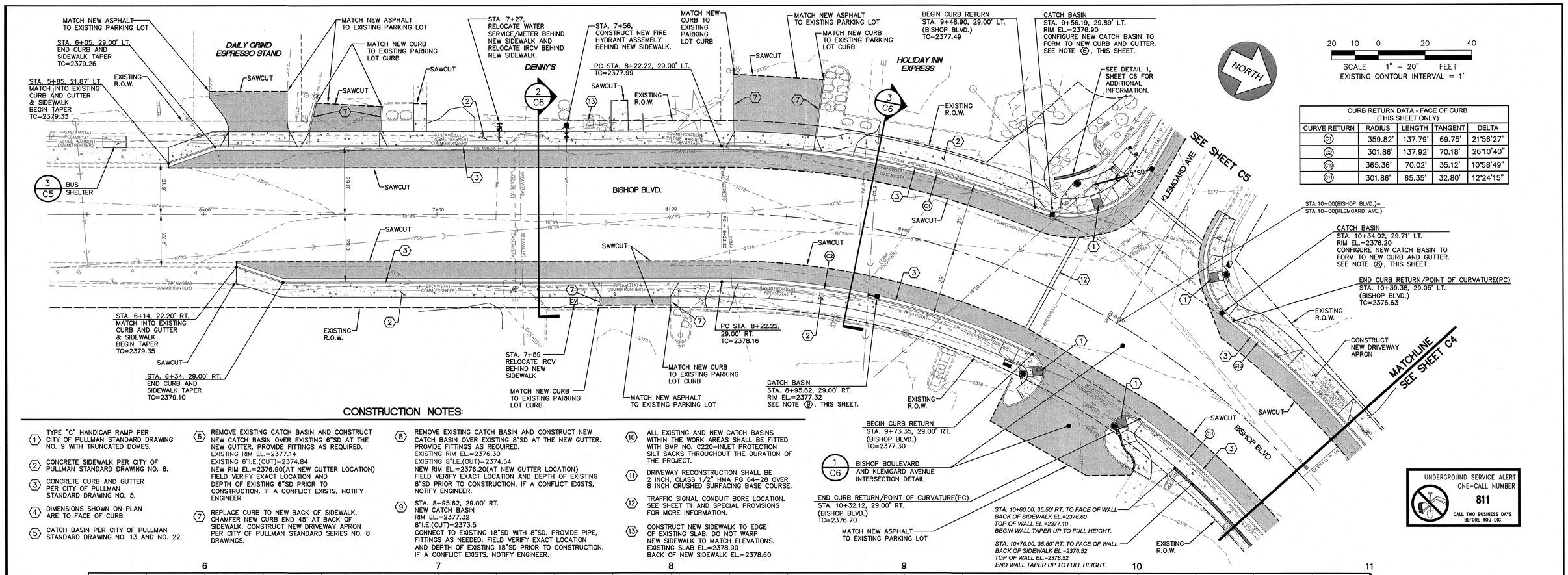

CURB RETURN DATA - FACE OF CURB (THIS SHEET ONLY)				
CURVE RETURN	RADIUS	LENGTH	TANGENT	DELTA
C1	359.82'	137.79'	69.75'	21°56'27"
C2	301.86'	137.92'	70.18'	26°10'40"
C10	365.36'	70.02'	35.12'	10°58'49"
C11	301.86'	65.35'	32.80'	12°24'15"

CONSTRUCTION NOTES:

1. TYPE "C" HANDICAP RAMP PER CITY OF PULLMAN STANDARD DRAWING NO. 9 WITH TRUNCATED DOMES.
2. CONCRETE SIDEWALK PER CITY OF PULLMAN STANDARD DRAWING NO. 8.
3. CONCRETE CURB AND GUTTER PER CITY OF PULLMAN STANDARD DRAWING NO. 5.
4. DIMENSIONS SHOWN ON PLAN ARE TO FACE OF CURB
5. CATCH BASIN PER CITY OF PULLMAN STANDARD DRAWING NO. 13 AND NO. 22.
6. REMOVE EXISTING CATCH BASIN AND CONSTRUCT NEW CATCH BASIN OVER EXISTING 6"SD AT THE NEW GUTTER. PROVIDE FITTINGS AS REQUIRED.
   EXISTING RIM EL.=2377.14
   EXISTING 6"I.E.(OUT)=2374.84
   NEW RIM EL.=2376.90(AT NEW GUTTER LOCATION)
   FIELD VERIFY EXACT LOCATION AND DEPTH OF EXISTING 6"SD PRIOR TO CONSTRUCTION. IF A CONFLICT EXISTS, NOTIFY ENGINEER.
7. REPLACE CURB TO NEW BACK OF SIDEWALK. CHAMFER NEW CURB END 45° AT BACK OF SIDEWALK. CONSTRUCT NEW DRIVEWAY APRON PER CITY OF PULLMAN STANDARD SERIES NO. 8 DRAWINGS.
8. REMOVE EXISTING CATCH BASIN AND CONSTRUCT NEW CATCH BASIN OVER EXISTING 8"SD AT THE NEW GUTTER. PROVIDE FITTINGS AS REQUIRED.
   EXISTING RIM EL.=2376.30
   EXISTING 8"I.E.(OUT)=2374.54
   NEW RIM EL.=2376.20(AT NEW GUTTER LOCATION)
   FIELD VERIFY EXACT LOCATION AND DEPTH OF EXISTING 8"SD PRIOR TO CONSTRUCTION. IF A CONFLICT EXISTS, NOTIFY ENGINEER.
9. STA. 8+95.62, 29.00' RT.
   NEW CATCH BASIN
   RIM EL.=2377.32
   8"I.E.(OUT)=2373.5
   CONNECT TO EXISTING 18"SD WITH 8"SD. PROVIDE PIPE, FITTINGS AS NEEDED. FIELD VERIFY EXACT LOCATION AND DEPTH OF EXISTING 18"SD PRIOR TO CONSTRUCTION. IF A CONFLICT EXISTS, NOTIFY ENGINEER.
10. ALL EXISTING AND NEW CATCH BASINS WITHIN THE WORK AREAS SHALL BE FITTED WITH BMP NO. C220–INLET PROTECTION SILT SACKS THROUGHOUT THE DURATION OF THE PROJECT.
11. DRIVEWAY RECONSTRUCTION SHALL BE 2 INCH, CLASS 1/2" HMA PG 64–28 OVER 8 INCH CRUSHED SURFACING BASE COURSE.
12. TRAFFIC SIGNAL CONDUIT BORE LOCATION. SEE SHEET T1 AND SPECIAL PROVISIONS FOR MORE INFORMATION.
13. CONSTRUCT NEW SIDEWALK TO EDGE OF EXISTING SLAB. DO NOT WARP NEW SIDEWALK TO MATCH ELEVATIONS. EXISTING SLAB EL.=2378.90
    BACK OF NEW SIDEWALK EL.=2378.60

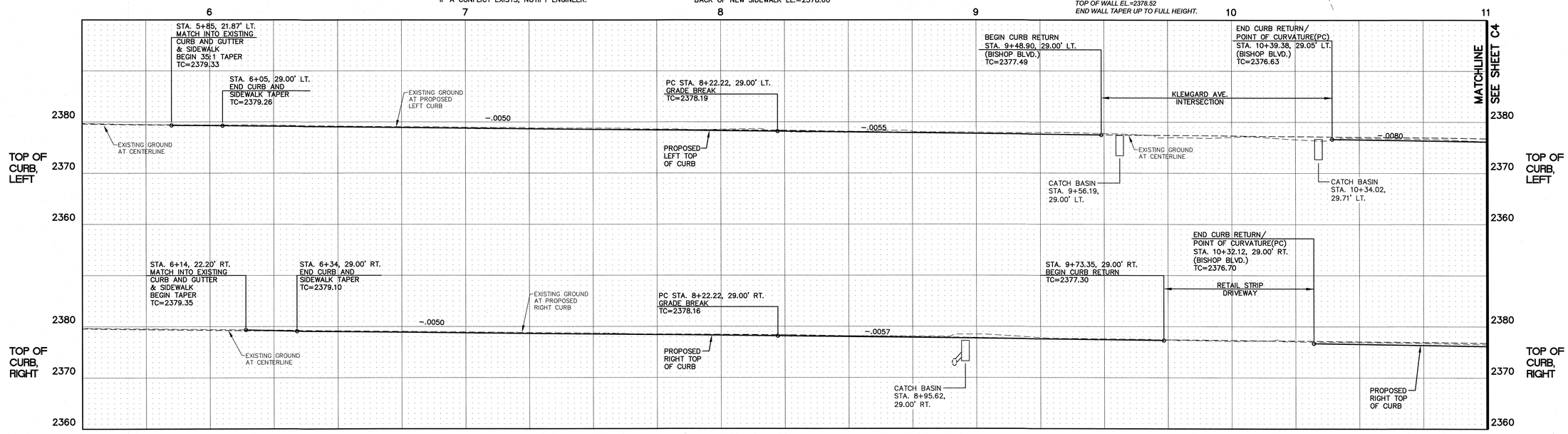

No.	Date	By	Ckd.	Appr.	Revisions

		Date
Drawn	DJJ	3/2014
Designed	RGP/TKS	3/2014
Checked By	RGP	3/2014

RONALD G. PACE, STATE OF WASHINGTON, 27622, REGISTERED PROFESSIONAL ENGINEER, 4/4/14

Taylor Engineering, Inc.
Civil Design and Land Planning
245 E. Main St.
Pullman, Washington 99163
(509) 334-5115 FAX (509) 334-5956

CITY OF PULLMAN, WASHINGTON
ENGINEERING DIVISION

SCALE
HORIZ. 1"=20'
VERT. 1"=10'

KLEMGARD AVE. AND BISHOP BLVD.

BISHOP BOULEVARD WIDENING
PLAN AND PROFILE
STA. 5+85 TO STA. 11+00

ROADWAY
SHEET
C3

11001P–(C3–C4)BISHOP PnP.dwg

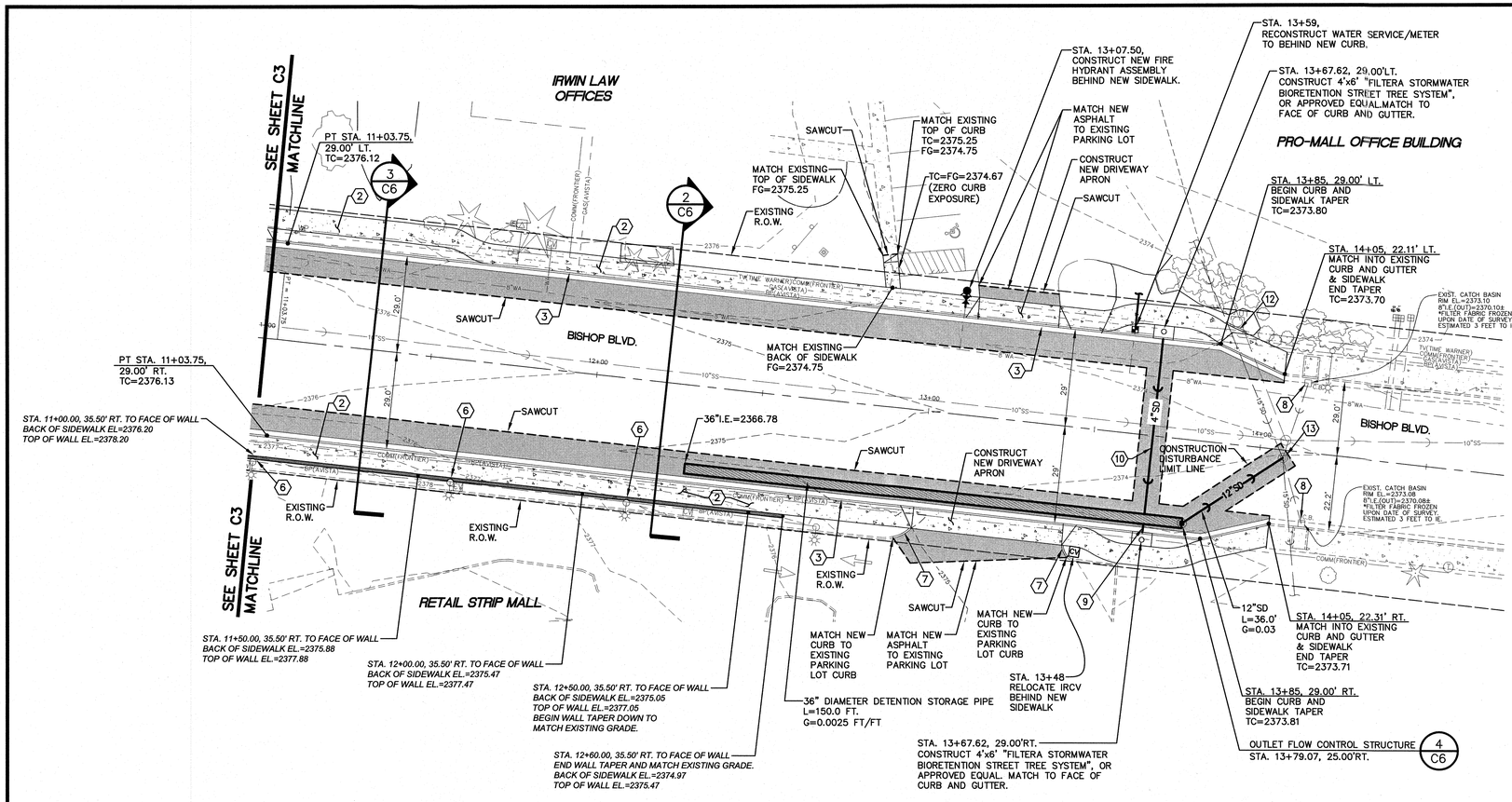

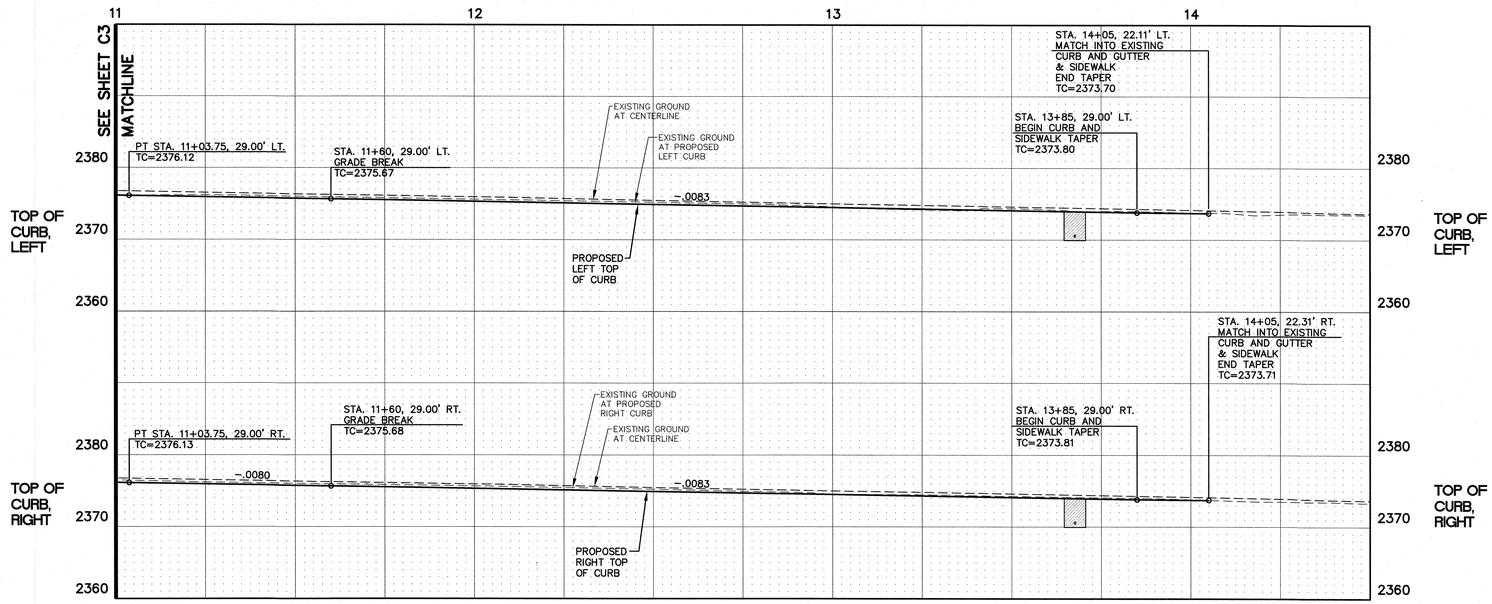

UNDERGROUND SERVICE ALERT
ONE-CALL NUMBER
811
CALL TWO BUSINESS DAYS BEFORE YOU DIG

NORTH

20 10 0 20 40

SCALE 1" = 20' FEET
EXISTING CONTOUR INTERVAL = 1'

CONSTRUCTION NOTES:

1. TYPE "C" HANDICAP RAMP PER CITY OF PULLMAN STANDARD DRAWING NO. 9 WITH TRUNCATED DOMES.
2. CONCRETE SIDEWALK PER CITY OF PULLMAN STANDARD DRAWING NO. 8.
3. CONCRETE CURB AND GUTTER PER CITY OF PULLMAN STANDARD DRAWING NO. 5.
4. DIMENSIONS SHOWN ON PLAN ARE TO FACE OF CURB
5. CATCH BASIN PER CITY OF PULLMAN STANDARD DRAWING NO. 13 AND NO. 22.
6. CONTRACTOR SHALL CUT MODULAR BLOCK WALL UNITS TO FIT IN BETWEEN EXISTING LIGHT POLE BASE AND NEW BACK OF SIDEWALK.
7. REPLACE CURB TO NEW BACK OF SIDEWALK. CHAMFER NEW CURB END 45°. CONSTRUCT NEW DRIVEWAY PER PULLMAN STANDARD SERIES NO. 8 DRAWINGS.
8. ALL EXISTING AND NEW CATCH BASINS WITHIN THE WORK AREAS SHALL BE FITTED WITH BMP NO. C220–INLET PROTECTION SILT SACKS THROUGHOUT THE DURATION OF THE PROJECT.
9. CONNECT FROM FILTERA TREE SYSTEM TO 36" DETENTION STORAGE PIPE
   L=3.0'
   G=0.450
   4"I.E. AT FILTERA BOX OUTLET=2570.35
   4"I.E. INTO 36" DETENTION PIPE=2569.00
10. CONNECT FROM FILTERA TREE SYSTEM TO 36" DETENTION STORAGE PIPE
    L=52.0'
    G=0.026
    4"I.E. AT FILTERA BOX OUTLET=2570.34
    4"I.E. INTO 36" DETENTION PIPE=2569.00
11. DRIVEWAY RECONSTRUCTION SHALL BE 2 INCH CLASS 1/2" HMA, PG 64–28 OVER 8 INCH CRUSHED SURFACING BASE COURSE.
12. CONSTRUCT CURB ALONG BACK OF SIDEWALK TO MATCH TOP OF UTILITY VAULT. EXISTING VAULT RIM EL.=2374.73 BACK OF NEW SIDEWALK FG=2373.90± CHAMFER NEW CURB ENDS 45°.
13. EXISTING STORM MANHOLE
    RIM EL.=2373.95
    EXIST. 8"I.E.(IN)=2369.66(NW)
    EXIST. 8"I.E.(IN)=2370.44(E)
    EXIST. 15"I.E.(IN)=2365.25(SW)
    EXIST. 15"I.E.E(OUT)=2365.17(SE)
    NEW 12"I.E.(IN)=2365.30(S)
    CONTRACTOR SHALL CORE EXISTING MANHOLE AND RE–SHAPE CHANNEL TO ACCOMMODATE NEW PIPE. USE KOR–N–SEAL ADAPTOR, OR APPROVED EQUAL. FIELD VERIFY EXACT LOCATION AND DEPTH PRIOR TO CONSTRUCTION. IF A CONFLICT EXISTS, NOTIFY ENGINEER. USE CONTROLLED DENSITY FILL FOR STORM SEWER TRENCH BACKFILL.

No.	Date	By	Ckd.	Appr.	Revisions

Drawn	DJJ	3/2014
Designed	RGP/TKS	3/2014
Checked By	RGP	3/2014

RONALD G. PAGE, STATE OF WASHINGTON, 27622, REGISTERED PROFESSIONAL ENGINEER — 9/4/14

Taylor Engineering, Inc.
Civil Design and Land Planning
245 E. Main St.
Pullman, Washington 99163
(509) 334–5115 FAX (509) 334–5956

CITY OF PULLMAN, WASHINGTON
ENGINEERING DIVISION

SCALE
HORIZ. 1"=20'
VERT. 1"=10'

KLEMGARD AVE. AND BISHOP BLVD.

BISHOP BOULEVARD WIDENING
PLAN AND PROFILE
STA. 11+00 TO STA. 14+05

ROADWAY

SHEET
C4

11001P–(C3–C4)BISHOP PnP.dwg

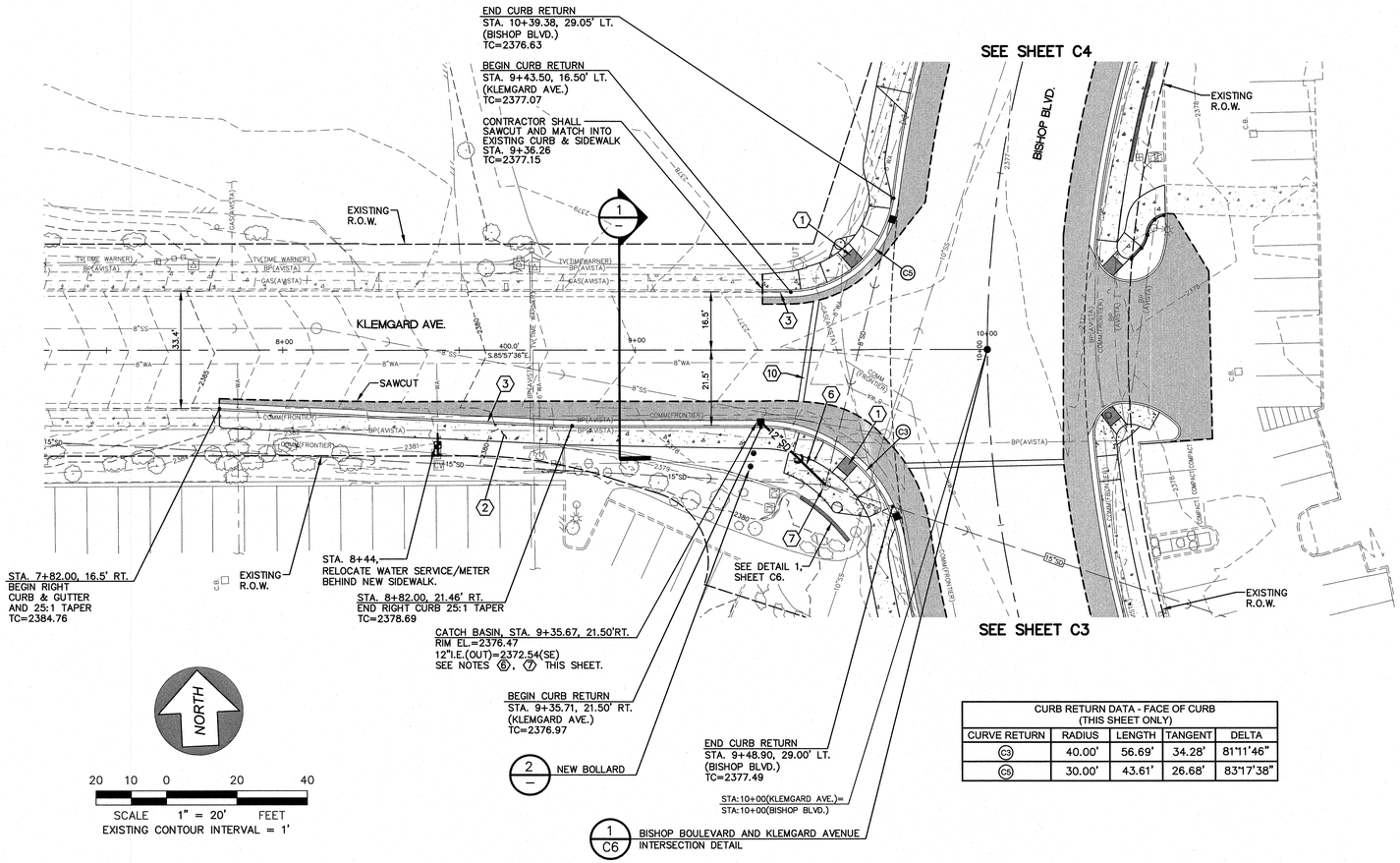

2 — NEW BOLLARD

1 / C6 — BISHOP BOULEVARD AND KLEMGARD AVENUE INTERSECTION DETAIL

CURB RETURN DATA - FACE OF CURB (THIS SHEET ONLY)				
CURVE RETURN	RADIUS	LENGTH	TANGENT	DELTA
C3	40.00'	56.69'	34.28'	81°11'46"
C6	30.00'	43.61'	26.68'	83°17'38"

CONSTRUCTION NOTES:

1. TYPE "C" HANDICAP RAMP PER CITY OF PULLMAN STANDARD DRAWING NO. 9 WITH TRUNCATED DOMES.
2. CONCRETE SIDEWALK PER CITY OF PULLMAN STANDARD DRAWING NO. 8.
3. CONCRETE CURB AND GUTTER PER CITY OF PULLMAN STANDARD DRAWING NO. 5.
4. DIMENSIONS SHOWN ON PLAN ARE TO FACE OF CURB
5. CATCH BASIN PER CITY OF PULLMAN STANDARD DRAWING NO. 13 AND NO. 22.
6. 12"SD
   L=23.0'
   G=.0452
   CONNECT TO EXISTING MANHOLE.
   12"I.E.(IN)=2371.50
   PROVIDE FITTINGS AS REQUIRED.
7. EXISTING SD MANHOLE
   EXISTING RIM EL.=2378.51
   NEW RIM EL.=2377.30
   REMOVE EXIST. 8"I.E.(IN)=2374.76(N) AND GROUT MANHOLE WALL.
   EXIST. 8"I.E.(IN)=2371.51(NE)
   EXIST. 6"I.E.(IN)=2374.06(SE)
   EXIST. 15"I.E.(IN)=2370.31(W)
   EXIST. 15"I.E.(OUT)=2370.21(SE)
   NEW 12"I.E.(IN)=2371.50(NW)
8. ALL EXISTING AND NEW CATCH BASINS WITHIN THE WORK AREAS SHALL BE FITTED WITH BMP NO. C220–INLET PROTECTION SILT SACKS THROUGHOUT THE DURATION OF THE PROJECT.
9. DRIVEWAY RECONSTRUCTION SHALL BE 2 INCH, CLASS 1/2" HMA PG 64–28 OVER 8 INCH CRUSHED SURFACING BASE COURSE.
10. TRAFFIC SIGNAL CONDUIT BORE LOCATION. SEE SHEET T1 AND SPECIAL PROVISIONS FOR MORE INFORMATION.

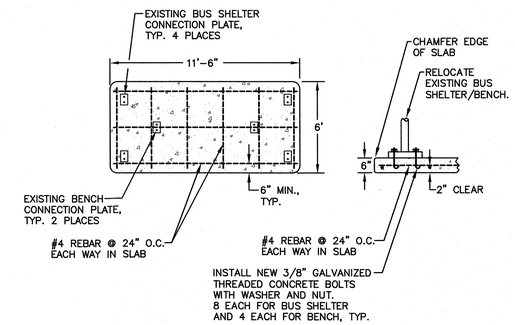

NOTES:

1. CONTRACTOR SHALL SALVAGE EXISTING BUS SHELTER AND BENCH FOR RE–USE ON NEW SLAB.
2. FIELD MEASURE FOR PLACEMENT OF NEW BUS SHELTER AND BENCH CONCRETE BOLT SPACINGS.

3 / C3 — BUS SHELTER
NOT TO SCALE

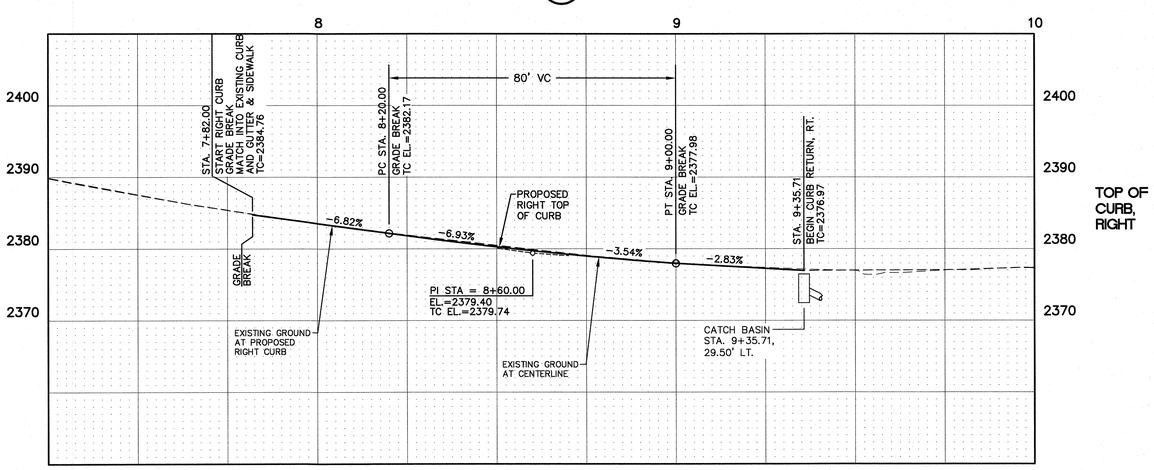

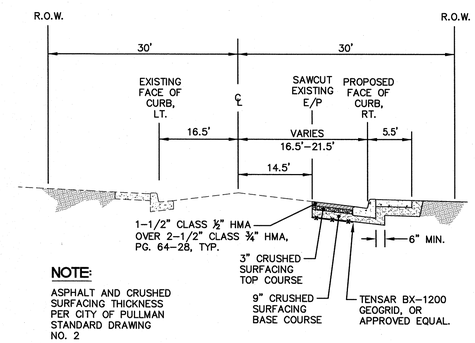

NOTE:

ASPHALT AND CRUSHED SURFACING THICKNESS PER CITY OF PULLMAN STANDARD DRAWING NO. 2

1 — KLEMGARD AVENUE WIDENING SECTION
NOT TO SCALE

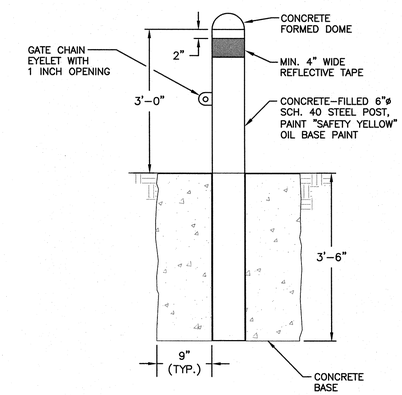

NOTE:

WHERE CONCRETE CURBING IS NOT INSTALLED, GUARD POSTS (2 EA. MIN) SHALL BE INSTALLED ON SIDE FACING PAVED SURFACE.

2 — NEW BOLLARD
NOT TO SCALE

No.	Date	By	Ckd.	Appr.	Revisions

		Date
Drawn	DJJ	3/2014
Designed	RGP/TKS	3/2014
Checked By	RGP	3/2014

RONALD G. FACE — STATE OF WASHINGTON — 21622 — REGISTERED PROFESSIONAL ENGINEER — 4/4/14

Taylor Engineering, Inc.
Civil Design and Land Planning
245 E. Main St.
Pullman, Washington 99163
(509) 334–5115 FAX (509) 334–5956

CITY OF PULLMAN, WASHINGTON
ENGINEERING DIVISION

SCALE
HORIZ. 1"=20'
VERT. 1"=10'

KLEMGARD AVE. AND BISHOP BLVD.

KLEMGARD AVENUE WIDENING
PLAN AND PROFILE
STA. 7+82 TO STA. 10+00

ROADWAY
SHEET
C5

11001P–(C5)KLEMGARD PnP.dwg

CURB RETURN DATA - FACE OF CURB (THIS SHEET ONLY)				
CURVE RETURN	RADIUS	LENGTH	TANGENT	DELTA
C3	40.00'	56.69'	34.28'	81°11'46"
C5	30.00'	43.61'	26.68'	83°17'38"
C6	10.00'	27.69'	53.17'	158°41'54"
C7	24.84'	7.44'	3.75'	17°10'21"
C8	9.00'	13.82'	8.69'	87°57'56"
C9	20.70'	17.73'	9.45'	49°05'31"
C12	3.00'	6.84'	6.54'	130°42'26"

CONSTRUCTION NOTE:

1. CONTRACTOR SHALL INSTALL CITY OF PULLMAN HAND RAIL PER STD. DRAWING NO. 1.
2. CONSTRUCT HANDICAP RAMPS TO CITY OF PULLMAN STANDARD DRAWING NO. 9 WITH TRUNCATED DOMES.

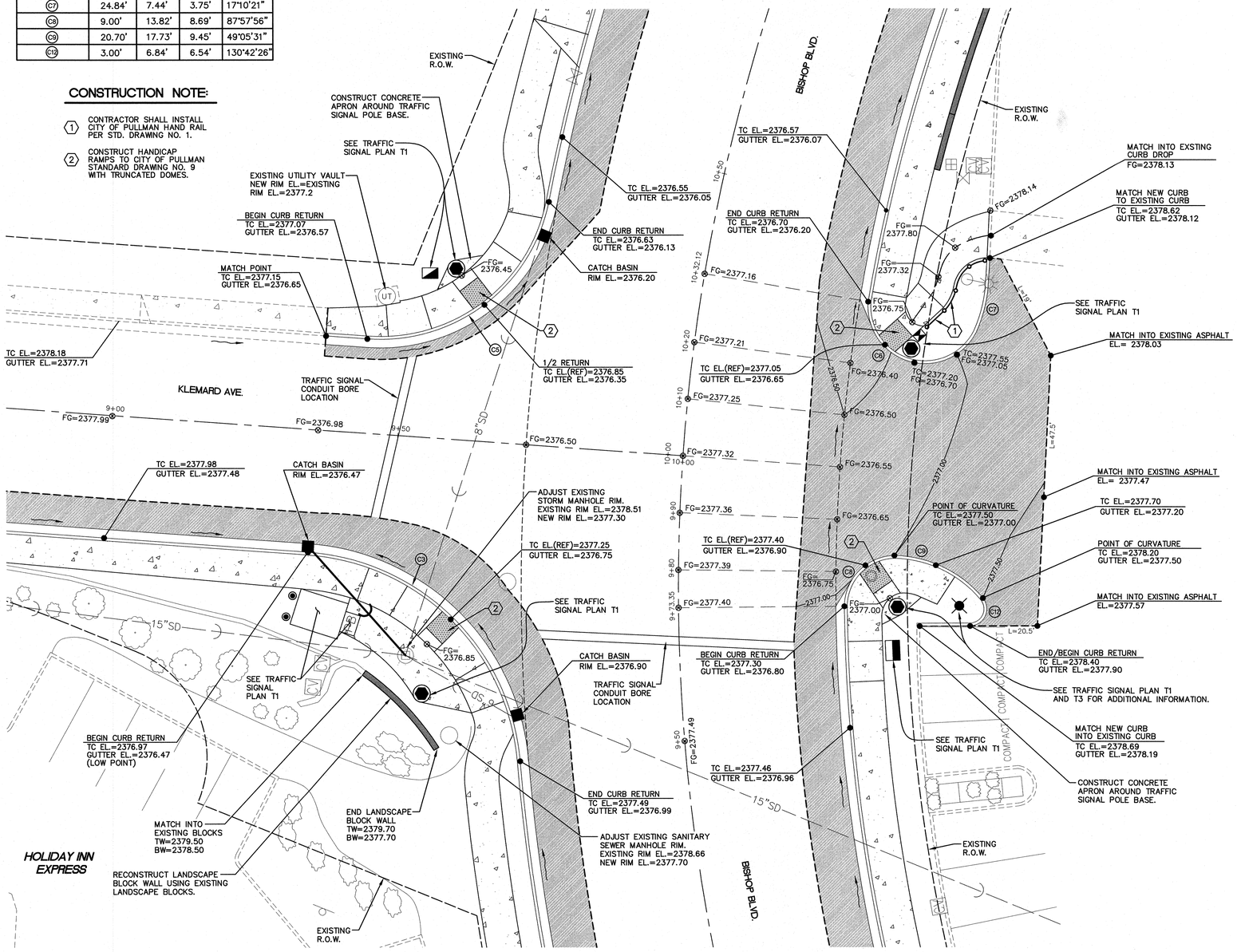

UNDERGROUND SERVICE ALERT
ONE-CALL NUMBER
811
CALL TWO BUSINESS DAYS BEFORE YOU DIG

1 C3,C5 BISHOP BOULEVARD AND KLEMGARD AVENUE INTERSECTION DETAIL
SCALE: 1"=10'

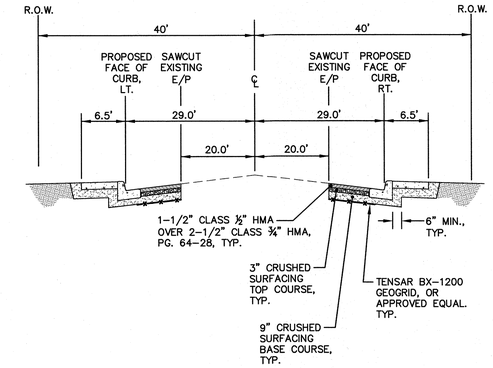

2 C3,C4 BISHOP BOULEVARD WIDENING SECTION
NOT TO SCALE

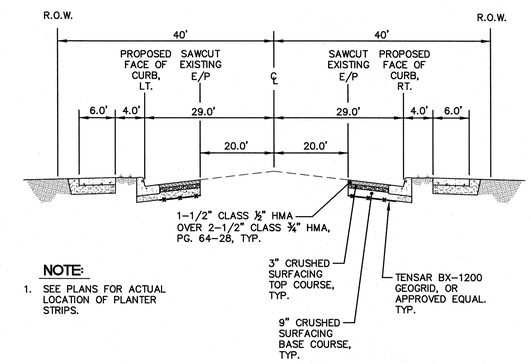

NOTE:

1. SEE PLANS FOR ACTUAL LOCATION OF PLANTER STRIPS.

3 C3,C4 BISHOP BOULEVARD WIDENING SECTION WITH PLANTER STRIP
NOT TO SCALE

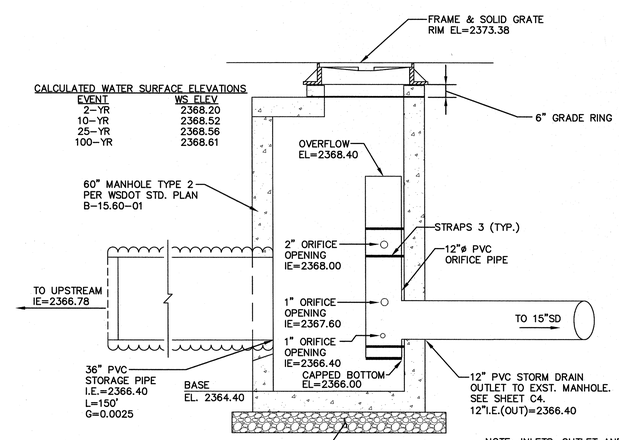

CALCULATED WATER SURFACE ELEVATIONS

EVENT	WS ELEV
2-YR	2368.20
10-YR	2368.52
25-YR	2368.56
100-YR	2368.61

NOTE: INLETS, OUTLET AND THE 12" ORIFICE PIPE ARE SHOWN DIAGRAMMATICALLY. CONTRACTOR MAY REARRANGE HORIZONTALLY AS NECESSARY.

4 C4 OUTLET FLOW CONTROL STRUCTURE
NOT TO SCALE

No.	Date	By	Ckd.	Appr.	Revisions

		Date
Drawn	DJJ	3/2014
Designed	RGP/TKS	3/2014
Checked By	RGP	3/2014

RONALD G. PACE, STATE OF WASHINGTON, 21622, REGISTERED PROFESSIONAL ENGINEER, 4/4/14

Taylor Engineering, Inc.
Civil Design and Land Planning
245 E. Main St.
Pullman, Washington 99163
(509) 334-5115 FAX (509) 334-5956

CITY OF PULLMAN, WASHINGTON
ENGINEERING DIVISION

SCALE
HORIZ. NA
VERT. NA

KLEMGARD AVE. AND BISHOP BLVD.

ROADWAY

SHEET

DETAILS

C6

11001P-(C6)DETAILS.dwg

UNDERGROUND SERVICE ALERT
ONE-CALL NUMBER
811
CALL TWO BUSINESS DAYS BEFORE YOU DIG

NORTH

40 20 0 40 80
SCALE 1" = 40' FEET

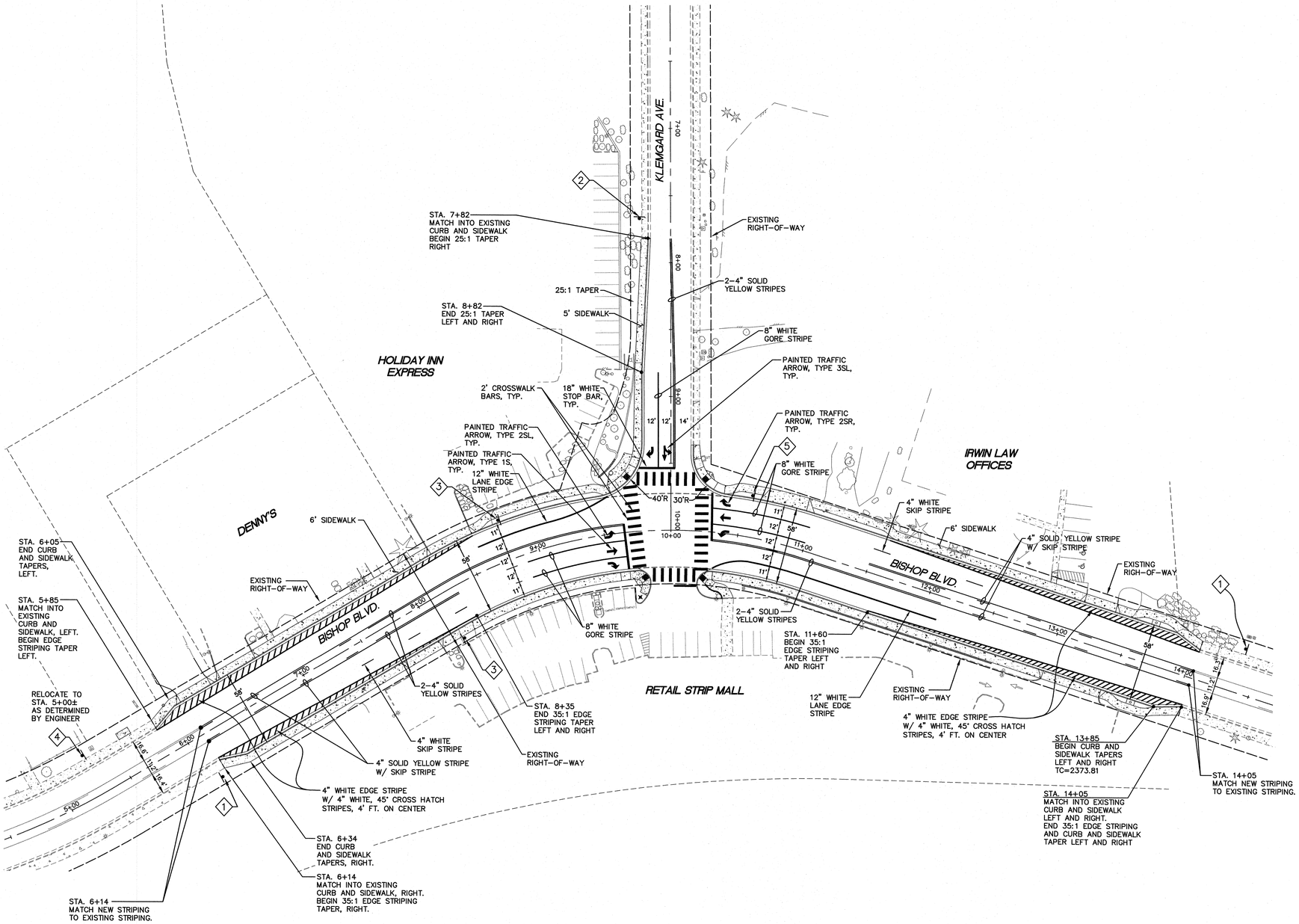

SIGN TABLE

	NO.	SIGN	MUTCD DESIGNATION	DESCRIPTION
ONLY ONLY ONLY	1	ADVANCE INTERSECTION LANE CONTROL	R3-8B	ENGINEER TO DETERMINE EXACT LOCATION OF NEW SIGN.
ONLY	2	ADVANCE INTERSECTION LANE CONTROL	R3-8	ENGINEER TO DETERMINE EXACT LOCATION OF NEW SIGN.
SPEED LIMIT 35	3	SPEED LIMIT 35 MPH	R2-1	RELOCATE EXISTING SIGN
CENTER LANE ONLY / 2-WAY LEFT TURN	4	CENTER LANE TURN AND TWO WAY LEFT TURN ONLY	R3-9B	RELOCATE EXISTING SIGNS. SEE NOTE ON PLAN.
FRANKLIN ELEMENTARY	5	FRANKLIN ELEMENTARY	CUSTOM SIGN	RELOCATE EXISTING SIGN

NOTES:

1. ALL SIGNING AND STRIPING SHALL BE IN CONFORMANCE WITH THE MANUAL ON UNIFORM TRAFFIC CONTROL DEVICES (MUTCD), CURRENT EDITION.
2. PAVEMENT MARKING LAYOUT SHALL BE THE RESPONSIBILITY OF THE CONTRACTOR AS APPROVED BY THE ENGINEER.
3. STOP LINE STRIPING SHALL BE IN CONFORMANCE WITH WSDOT STANDARD PLAN M-24.60-02. USE FOUR(4) FT. CLEAR DISTANCE BETWEEN STOP LINE AND CROSSWALK STRIPE.
4. TRAFFIC ARROW MARKINGS SHALL BE IN CONFORMANCE WITH WSDOT STANDARD PLAN M-24.40-01.
5. LANE STRIPING SHALL BE IN CONFORMANCE WITH WSDOT STANDARD PLAN M-20.10-01.

No.	Date	By	Ckd.	Appr.	Revisions

		Date
Drawn	DJJ	3/2014
Designed	TKS	3/2014
Checked By	RGP	3/2014

RONALD G. PACE — STATE OF WASHINGTON — 21622 — REGISTERED PROFESSIONAL ENGINEER — 9/4/14

Taylor Engineering, Inc.
Civil Design and Land Planning
245 E. Main St.
Pullman, Washington 99163
(509) 334-5115 FAX (509) 334-5956

CITY OF PULLMAN, WASHINGTON
ENGINEERING DIVISION

SCALE
HORIZ. 1"=40'
VERT. N/A

KLEMGARD AVE. AND BISHOP BLVD.

SIGNING AND STRIPING PLAN

ROADWAY

SHEET C7

11001P-(7)SIGNAGE-STRIPING.dwg

CABLE/CONDUIT SCHEDULE

RUN NO.	CONDUIT/ RACEWAY	VEH DET CABLE	ILLUM STREET SIGN	EVP DET 3CS	EVP IND 2CS	PED PB 2CS	PED HEAD 7C	VEH HEAD 5C	VEH HEAD 7C	ILLUM #8
1	MA								1	
2	MA			1	1				1	
3	MA	1		1	1				1	
4	MA	1		1	1			1	1	
5	MA	1		1	1			2	1	
5B	MA	1	1	1	1			2	1	
6	3"	1		1	1	2	1	2	1	1
6B	3"	1	1	1	1	2	1	2	1	1
7	3"	1		1	1	2	1	2	1	1
	3"	SPARE								
8	MA							1		
9	MA			1	1			1		
10	MA	1		1	1			1		
11	MA	1		1	1			2		
12	3"	1		1	1	2	1	1	1	1
13	4"	2		2	2	4	2	3	2	2
	3"	SPARE								
14	MA							1		
15	MA	1						1		
16	MA	1	1					2		
17	3"	1	1			2	1	1	1	1
18	3"	1	1			2	1	1	1	1
	3"	SPARE								
19	4"	2		2	2	4	2	3	2	
	3"	1				2	1	1	1	
	3"	1		1	1	2	1	2	1	
	3"	SPARE								
20	2"		2							4
21	2"	2 – #6, FROM SERVICE TO CONTROLLER								
22		AS DETERMINED BY SERVICING UTILITY								

CONSTRUCTION NOTES

1. INSTALL TYPE III LIGHTING AND MAST ARM STANDARD COMPLETE WITH SIGNAL DISPLAYS, TWO POLARA PRESSURE SENSITIVE PED PUSH BUTTONS (PART RBDL3–B–4H), L.E.D 16X18 COUNTDOWN PEDESTRIAN DISPLAYS, TERMINAL CABINET, MAST ARM MOUNTED VEHICLE VIDEO DETECTION, EMERGENCY VEHICLE PRE–EMPTION DETECTOR/INDICATOR, AND 200 WATT HPS TYPE III M–C 240V AC LUMINAIRE.
2. INSTALL TYPE III LIGHTING AND MAST ARM STANDARD COMPLETE WITH SIGNAL DISPLAYS, TWO POLARA PRESSURE SENSITIVE PED PUSH BUTTONS (PART RBDL3–B–4H), L.E.D 16X18 COUNTDOWN PEDESTRIAN DISPLAYS, TERMINAL CABINET, MAST ARM MOUNTED VEHICLE VIDEO DETECTION, EMERGENCY VEHICLE PRE–EMPTION DETECTOR/INDICATOR, ILLUMINATED STREET SIGN (BI–DIRECTIONAL) AND 200 WATT HPS TYPE III M–C 240V AC LUMINAIRE.
3. INSTALL TYPE III LIGHTING AND MAST ARM STANDARD COMPLETE WITH SIGNAL DISPLAYS, TWO POLARA PRESSURE SENSITIVE PED PUSH BUTTONS (PART RBDL3–B–4H), L.E.D. 16X18 COUNTDOWN PEDESTRIAN DISPLAYS, TERMINAL CABINET, MAST ARM MOUNTED VEHICLE VIDEO DETECTION, ILLUMINATED STREET SIGN (BI–DIRECTIONAL) AND 200 WATT HPS TYPE III M–C 240V AC LUMINAIRE.
4. INSTALL P44 CONTROLLER CABINET AND NEMA TS2 SIGNAL CONTROLLER. INSTALL STRUT MOUNTED MODIFIED TYPE B SERVICE PER WSDOT STANDARD PLAN, J–3B. SYSTEM SHALL BE GROUNDED PER WSDOT STANDARD PLAN, J–60.05–00..
5. COORDINATE ELECTRICAL SERVICE WITH AVISTA CORPORATION.
6. CONTRACTOR SHALL FIELD LOCATE EXISTING STORM SEWER AND SANITARY SEWER INFRASTRUCTURE ON THE SOUTHWEST CORNER PRIOR TO CONSTRUCTION TO VERIFY LOCATION. IF A CONFLICT EXISTS, NOTIFY THE ENGINEER IMMEDIATELY.
7. CONDUIT CROSSING BISHOP BOULEVARD AND KLEMGARD AVENUE SHALL BE INSTALLED USING DIRECTIONAL BORING.

LEGEND

- CONDUIT
- VEHICLE SIGNAL DISPLAY
- PEDESTRIAN DISPLAY
- TYPE PS SIGNAL STANDARD
- TYPE III SIGNAL STANDARD
- TYPE 1 JUNCTION BOX
- TYPE 2 JUNCTION BOX
- TYPE 8 JUNCTION BOX
- PB — PULL BOX
- C — VIDEO DETECTION
- PRE–EMPTION DETECTOR/INDICATOR
- 6 — WIRE NOTE
- 5 — CONSTRUCTION NOTE
- 5 — SIGNAL STANDARD – SEE CHART
- X X — ILLUMINATED STREET SIGN (BI–DIRECTIONAL)

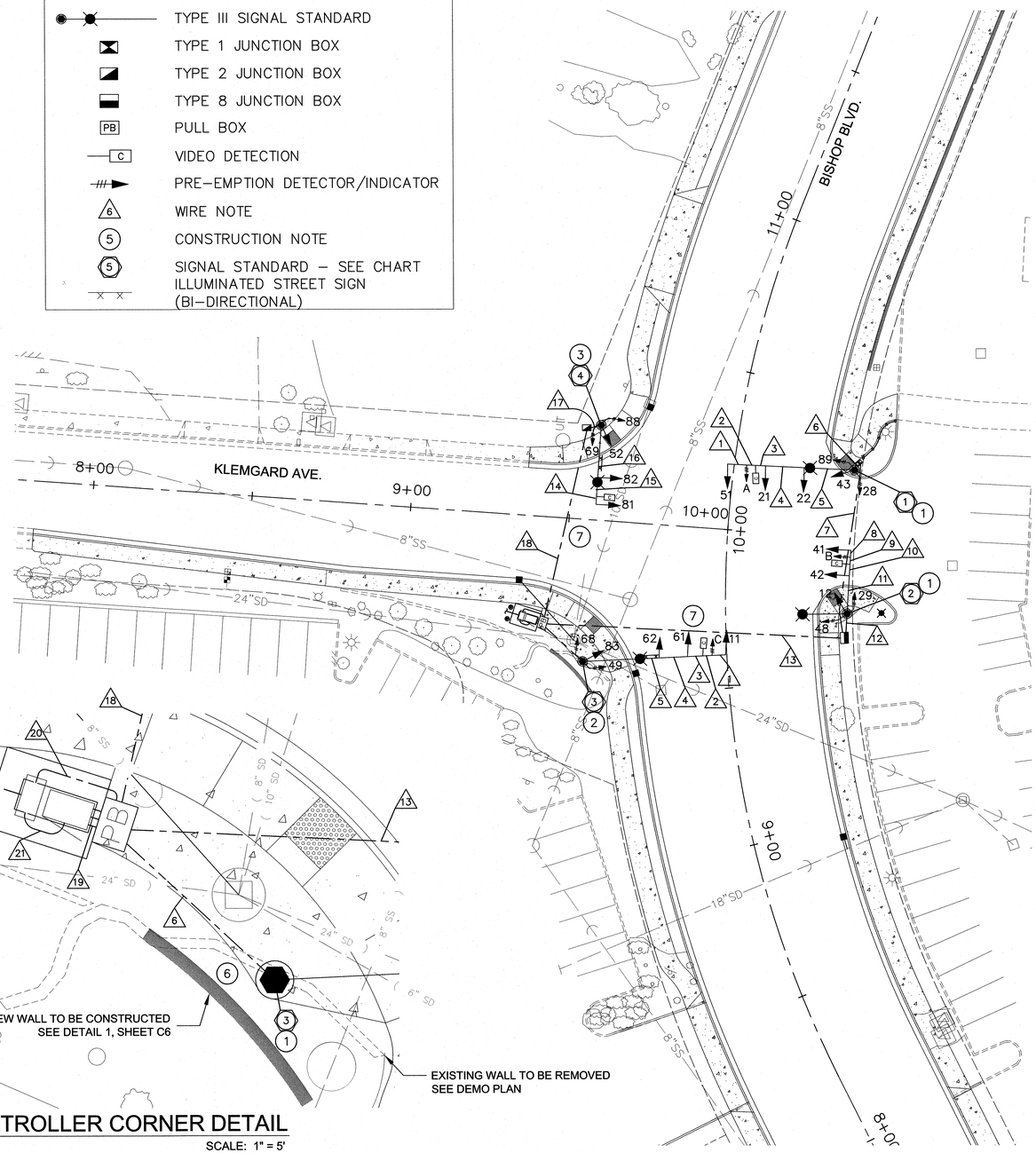

CONTROLLER CORNER DETAIL

SCALE: 1" = 5'

BREAKER SCHEDULE

CIRCUIT	BREAKER	CONTACTOR
MAIN	2P–100 AMP	
SIGNAL	1P–60 AMP	
ILLUM.–A	20 AMP	30 AMP
ILLUM.–B	20 AMP	

POLE LOCATION

STD. NO.	FIELD LOCATION					TYPE	MAST ARM LENGTH (FT)
	STATION	OFFSET	LT.	RT.	POA		
1	10+24.39	37.7'		X	354°	III	40
2	9+73.06	38.3'		X	95°	III	20
3	9+60.52	45.4'	X		0°	III	45
4	10+26.47	43.1'	X		85°	III	25

* ALL STATIONS REFERENCE BISHOP BOULEVARD

PHASE DIAGRAM

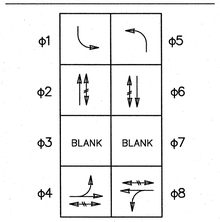

VEHICLE MOVEMENT
PED MOVEMENT

EMERGENCY VEHICLE PRE-EMPTION ASSIGNMENTS

A = φ2 & φ5
B = φ4
C = φ6 & φ1
D = NOT USED

SIGNAL HEAD DISPLAY NOTES

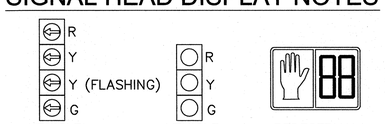

VEHICLE SIGNAL HEADS	VEHICLE SIGNAL HEADS	PEDESTRIAN SIGNAL HEADS
11,12,51,52	21,22,41,42,43 61,62,81,82,83	28,29,48,49 69,69,88,89

ALL VEHICLE HEADS SHALL HAVE 12" L.E.D.

ALL VEHICLE HEADS MOUNTED ON THE MAST ARM SHALL BE INSTALLED UTILIZING TYPE "N" MOUNTING.

ALL VEHICLE HEADS MOUNTED ON THE SIDE OF POST SHALL BE INSTALLED UTILIZING TYPE "K" MOUNTING.

ALL PEDESTRIAN HEADS SHALL BE 16X18 L.E.D. COUNTDOWN DISPLAYS INSTALLED USING TYPE "E" SIDE MOUNTS.

0 20 40 60
SCALE: 1" = 20'

No.	Date	By	Ckd.	Appr.	Revisions

Drawn	Date
CJR	04/2014
Designed	
CJR	04/2014
Checked By	
CJR	04/2014

CHRISTOPHER J. ANDERSEN — STATE OF WASHINGTON — 34880 — REGISTERED PROFESSIONAL ENGINEER

MORRISON MAIERLE, INC.
ENGINEERS·SURVEYORS·PLANNERS·SCIENTISTS
PO BOX 30097
SPOKANE, WA 99223
(509) 991–8684

CITY OF PULLMAN, WASHINGTON
ENGINEERING DIVISION

SCALE
HORIZ. 1"=20'
VERT. N/A

KLEMGARD AVE. AND BISHOP BLVD.

TRAFFIC SIGNAL PLAN

GENERAL
SHEET
T1

11031P–.dwg

CABLE/CONDUIT SCHEDULE

RUN NO.	CONDUIT/ RACEWAY	VEH DET CABLE	ILLUM STREET SIGN	EVP DET 3CS	EVP IND 2CS	PED PB 2CS	PED HEAD 7C	VEH HEAD 5C	VEH HEAD 7C	ILLUM #8
1	MA								1	
2	MA			1	1				1	
3	MA	1		1	1				1	
4	MA	1		1	1			1	1	
5	MA	1		1	1			2	1	
5B	MA	1	1	1	1			2	1	
6	3"	1		1	1	2	1	2	1	1
6B	3"	1	1	1	1	2	1	2	1	1
7	3"	1		1	1	2	1	2	1	1
	3"	SPARE								
8	MA							1		
9	MA			1	1			1		
10	MA	1		1	1			1		
11	MA	1		1	1			2		
12	3"	1		1	1	2	1	1	1	1
13	4"	2		2	2	4	2	3	2	2
	3"	SPARE								
14	MA							1		
15	MA	1						1		
16	MA	1	1					2		
17	3"	1	1			2	1	1	1	1
18	3"	1	1			2	1	1	1	1
	3"	SPARE								
19	4"	2		2	2	4	2	3	2	
	3"	1				2	1	1	1	
	3"	1		1	1	2	1	2	1	
	3"	SPARE								
20	2"		2							4
21	2"	2 – #6, FROM SERVICE TO CONTROLLER								
22		AS DETERMINED BY SERVICING UTILITY								

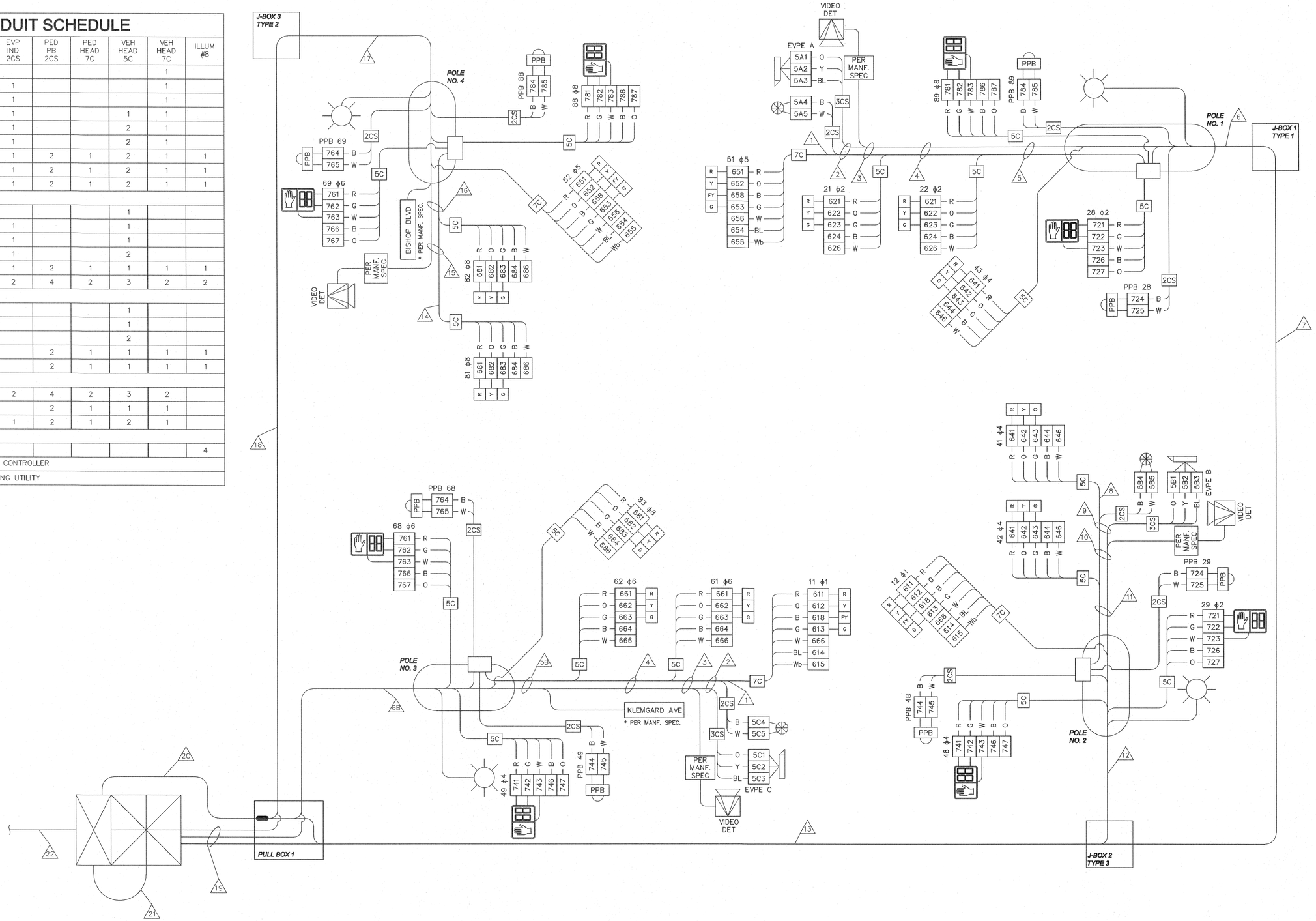

No.	Date	By	Ckd.	Appr.	Revisions

Drawn	CJR	04/2014
Designed	CJR	04/2014
Checked By	CJR	04/2014

CHRISTOPHER J. ALLEN — STATE OF WASHINGTON — 34880 — REGISTERED PROFESSIONAL ENGINEER

MORRISON MAIERLE, INC. — ENGINEERS·SURVEYORS·PLANNERS·SCIENTISTS — PO BOX 30097 SPOKANE, WA 99223 (509) 991-8684

CITY OF PULLMAN, WASHINGTON — ENGINEERING DIVISION

SCALE — HORIZ. NTS' — VERT. N/A

KLEMGARD AVE. AND BISHOP BLVD.

TRAFFIC SIGNAL WIRING PLAN

GENERAL — SHEET T2

11031P–.dwg

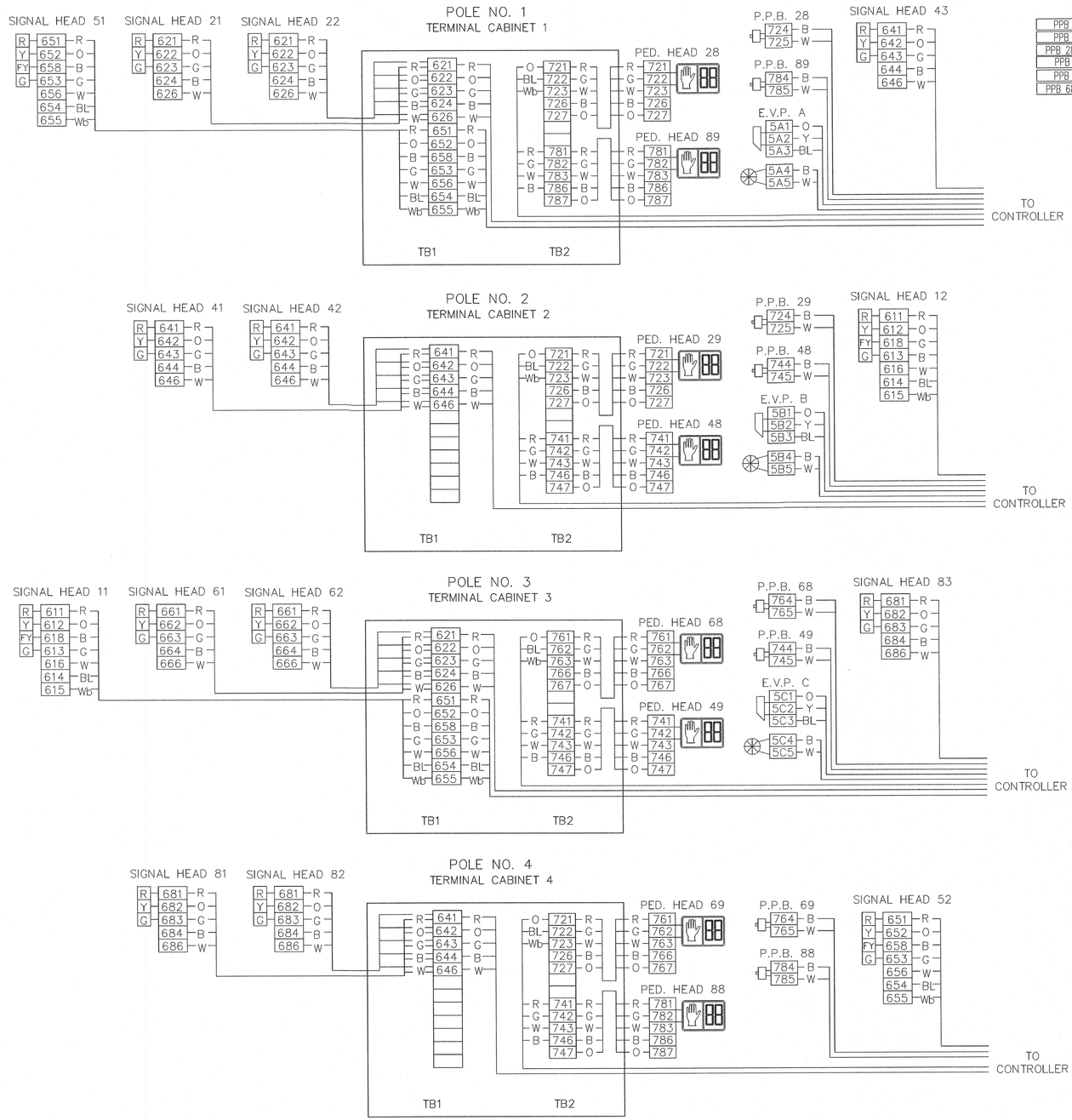

FIELD WIRE TERMINATIONS

DETECTION INPUT TERMINALS

TB 8

		1	
		2	
		3	
PPB 28,29	B	4	I12D φ2P
PPB 48,49	B	5	I12J φ4P
PPB 28,29,48,49	W	6	I12K COM
PPB 68,69	B	7	I13D φ6P
PPB 88,89	B	8	I13J φ8P
PPB 68,69,88,89	W	9	I13K COM
		10	
		11	
		12	

TB 9

		1		
		2	5AC3	BL A&C
DC-	J13K	3	5BD3	BL B
EVA	J12D	4	5A2	Y A
EVC	J12J	5	5C2	Y C
DC+	J12E	6	5AC1	O A
EVB	J13D	7	5B2	Y B
EVD	J13J	8	5D2	
DC+	J13E	9	5BD1	O B
RR1	J14D	10	516	
RR2	J14J	11	517	
COM	J14E	12	518	

NOTE: TERMINATE ALL WIRING IDENTIFIED AS AC– (6*6 AND 7*3) AT THE AC– BUSS.

SEAL AND COIL ALL SPARE CONDUCTORS AND STORE NEATLY ON THE CABINET FLOOR.

DISPLAY OUTPUT TERMINALS

41 42 43	R	641	101	φ4R
	O	642	102	φ4Y
	G	643	103	φ4G
48 49	R	741	104	φ4DW
	Ⓑ B	5B4	105	EVIB
	G	742	106	φ4W
81 82 83	R	681	107	φ8R
	O	682	108	φ8Y
	G	683	109	φ8G
88 89	R	781	110	φ8DW
	Ⓓ B	5D4	111	EVID
	G	782	112	φ8W

28 29	R	721	113	φ2DW
	Ⓐ B	5A4	114	EVIA
	G	722	115	φ2W
	R	631	116	φ3R
		632	117	φ3Y
		633	118	φ3G
68 69	R	761	119	φ6DW
	Ⓒ B	5C4	120	EVIC
	G	762	121	φ6W
		671	122	φ7R
		672	123	φ7Y
		673	124	φ7G

11 12	R	611	125	φ1R
	O	612	126	φ1Y
	G	613	127	φ1G
21 22	R	621	128	φ2R
	O	622	129	φ2Y
	G	623	130	φ2G
51 52	R	651	131	φ5R
	O	652	132	φ5Y
	G	653	133	φ5G
61 62	R	661	134	φ6R
	O	662	135	φ6Y
	G	663	136	φ6G

SERVICE PANEL

TBS

B	501	1	AC+
GRD		2	CG
W	502	3	AC–
		4	
		5	

CABINET WIRE TERMINATIONS

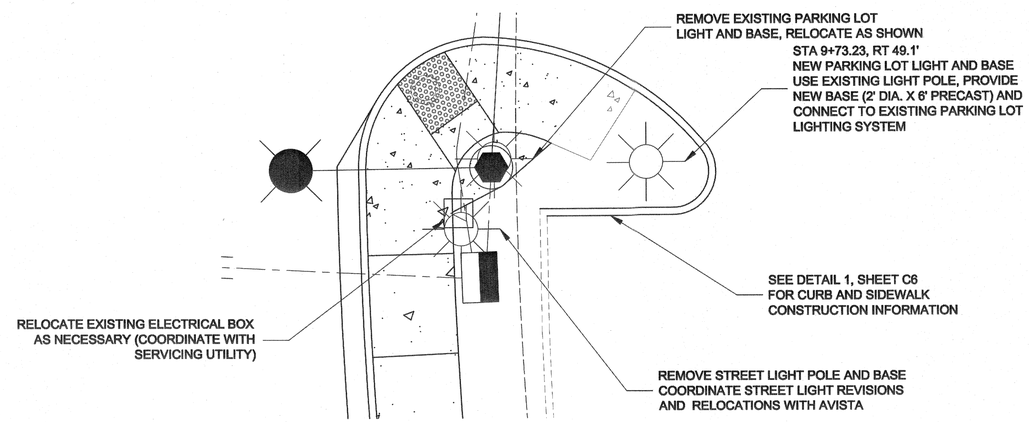

STREET LIGHT AND PARKING LOT LIGHT ELECTRICAL DETAIL

SCALE: 1"=5'

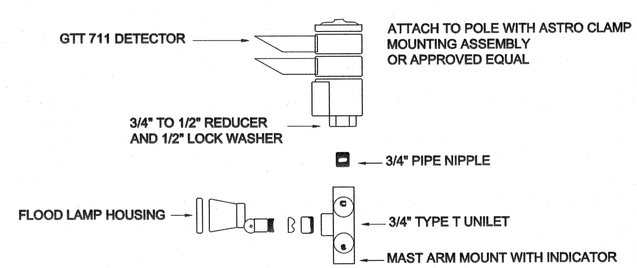

PRE-EMPT DETECTOR DETAILS

N.T.S.

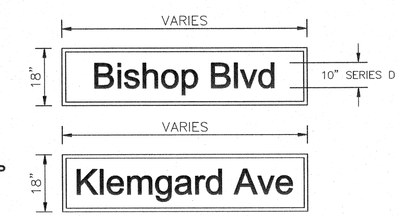

SIGNS SHALL BE BI–DIRECTIONAL INTERNALLY–ILLUMINATED L.E.D.

HOUSING SHALL BE ONE PIECE ALUMINUM BOX WITH WHTIE POLYCARBONATE SIGN PANELS. STREET NAME SIGN FACE SHALL HAVE A RETROREFLECTIVE TRANSPARENT GREEN COLOR SHEETING AND SHALL BE APPLIED TO THE POLYCARBONATE SIGN BLANK WITH COMPLETED SIGN LEGEND.

ALL HARDWARE USED IN THE CONSTRUCTION OF THE SIGN SHALL BE STAINLESS STEEL TYPE 304 OR 305.

SIGNS SHALL BE MOUNTED UNDER THE MAST–ARM.

LEGEND SHALL USE A COMBINATION OF UPPER AND LOWER CASE LETTERS BASED UPON 10" SERIES D UPPER CASE PER FHWA STANDARD HIGHWAY SIGNS AND MARKING MANUAL.

ILLUMINATED STREET SIGN

N.T.S.

No.	Date	By	Ckd.	Appr.	Revisions

Drawn	CJR	04/2014
Designed	CJR	04/2014
Checked By	CJR	04/2014

CHRISTOPHER J. JAMES — STATE OF WASHINGTON — 34880 — REGISTERED PROFESSIONAL ENGINEER

MORRISON MAIERLE, INC. — ENGINEERS·SURVEYORS·PLANNERS·SCIENTISTS — PO BOX 30097 SPOKANE, WA 99223 (509) 991-8684

CITY OF PULLMAN, WASHINGTON — ENGINEERING DIVISION

SCALE — HORIZ. NA — VERT. N/A

KLEMGARD AVE. AND BISHOP BLVD.

TRAFFIC SIGNAL WIRING DETAILS

GENERAL — SHEET T3

11031P–.dwg

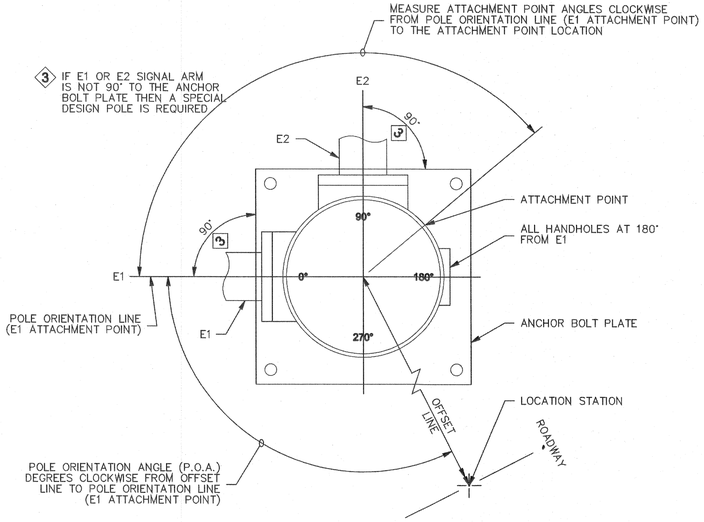

POLE ORIENTATION AND ATTACHMENT POINT DETAIL

NOTE:

TYPE E MOUNTS SHALL BE USED FOR PEDESTRIAN DISPLAYS ON TYPE II OR III SIGNAL STANDARDS, WITH THE FOLLOWING EXCEPTIONS: PEDESTRIAN DISPLAYS MOUNTED ON OCTAGONAL (8 SIDED) SIGNAL STANDARDS AT AN ANGLE OTHER THAN A 45° INCREMENT SHALL USE A TYPE A MOUNT FOR TWO PEDESTRIAN DISPLAYS OR A TYPE B FOR SINGLE PEDESTRIAN DISPLAY.

1 HEIGHT OF PEDESTRIAN PUSH BUTTON: 42"

2 PLACEMENT SHALL BE 2'-0" FROM FACE OF CURB OR EDGE OF SHOULDER, 3'-0" MIN. FROM FACE OF GUARDRAIL, 4'-0" MIN. FROM CONC. BARRIER TYPE 2 (MEASURED FROM A POINT WHERE THE BARRIER BASE MEETS THE SHOULDER SURFACE (TOE). MEASUREMENT TAKEN FROM TRAFFIC SIDE OF BARRIER TO FACE OF POLE.

3 DMS OR VMS IS NOT ALLOWED ON THIS POLE.

4 FOR POST MOUNTED SIGNS THERE SHALL BE 2'-0" MIN. FROM THE FACE OF THE CURB OR THE EDGE OF THE SHOULDER TO THE EDGE OF THE SIGN.

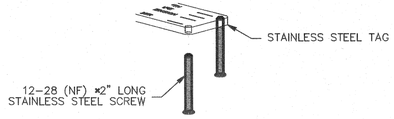

PARTIAL SIGNAL FOUNDATION IDENTIFICATION TAG DETAIL

SIGNAL STANDARD IDENTIFICATION TAG DETAIL

STD. NO. XX	SIGNAL STANDARD NO.
STA XX + XX.X	STATIONING
DWG. XXXXXX	APPROVED DRAWING NO.
FAB. X/XX/XXXX	FABRICATION DATE

EXAMPLE

STD. NO. 02
STA 33 + 93.3
DWG. AB12345
FAB. 6/14/2002

NOTE:
CORROSION RESISTANT METAL TAG, SECURED WITH (2) 0.125" RIVETS AS FOLLOWS: POLE SHAFT – LOCATED WITHIN 6" ABOVE HAND HOLE (TYPE II & III). SIGNAL AND LUMINAIRE MAST ARM (TYPE II & III) – LOCATED WITHIN 6" OF THE LUMINAIRE ARM AND THE POLE SHAFT CONNECTION POINT (TYPE III). TEXT SHALL BE A MINIMUM OF 3/16" HIGH, STAMPED OR EMBOSSED.

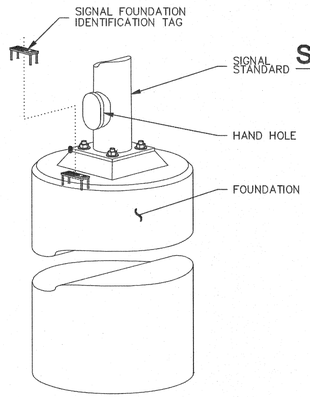

OBLIQUE VIEW
REINFORCING AND ANCHOR BOLTS NOT SHOWN FOR CLARITY

SIGNAL FOUNDATION IDENTIFICATION TAG DETAIL

FOUNDATION DEPTH	
FOUNDATION SHAPE	SQUARE OR ROUND
FOUNDATION DIMENSION	DIAMETER OR WIDTH
FOUNDATION ALTERNATE NUMBER	

NOTE:
STAINLESS STEEL TAG 10 GAGE, RECESSED INTO FINISHED CONCRETE. TOP OF TAG SET FLUSH WITH TOP OF FINISHED FOUNDATION. SECURE USING 12-28 (NF) ×2" LONG STAINLESS STEEL SCREWS TAPPED IN FROM UNDERSIDE (SIDE AGAINST CONCRETE) DRILL AND TAP COMPLETELY THROUGH AND LEAVE THE SCREW FLUSH WITH THE TOP. APPLY LOCKTITE TO BIND PIECES TOGETHER WHILE WAITING FOR THE CONCRETE TO CURE. TEXT SHALL BE A MINIMUM OF 3/16" HIGH, STAMPED.

LEGEND

a. Vehicle Display
b. Mast Arm Mounted Sign
c. Illuminated Street Name Sign
d. Pre-Empt Detector
e. Post Mounted Signe
f. Luminaire
g. Pedestrian Display
h. Cabinet
i. PPB-M
j. Handhole

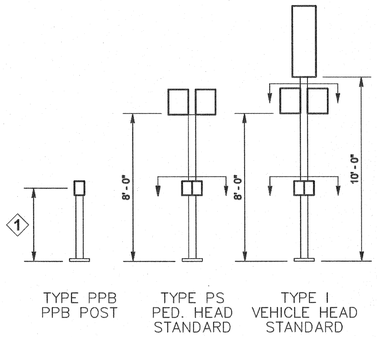

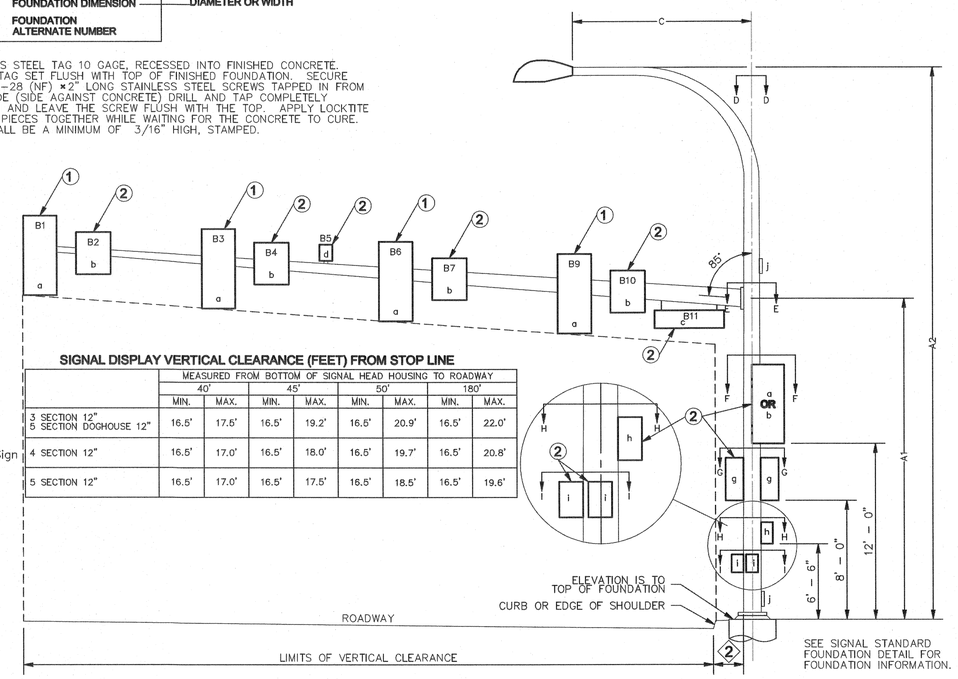

SIGNAL DISPLAY VERTICAL CLEARANCE (FEET) FROM STOP LINE

	MEASURED FROM BOTTOM OF SIGNAL HEAD HOUSING TO ROADWAY							
	40'		45'		50'		180'	
	MIN.	MAX.	MIN.	MAX.	MIN.	MAX.	MIN.	MAX.
3 SECTION 12" 5 SECTION DOGHOUSE 12"	16.5'	17.5'	16.5'	19.2'	16.5'	20.9'	16.5'	22.0'
4 SECTION 12"	16.5'	17.0'	16.5'	18.0'	16.5'	19.7'	16.5'	20.8'
5 SECTION 12"	16.5'	17.0'	16.5'	17.5'	16.5'	18.5'	16.5'	19.6'

TYPE II, III & SD SIGNAL STANDARD

NOTES

1. Mounting Coupling installed at offset distance indicated in chart.
2. Field installed. Sign b–7.5 SF sign area (max.) and sign height 3 ft. (max.) Sign c – 36 sf sign area (max.) installed 2' max to sign edge from post and sign height 3 ft. (max.)

1. Drill 1" diam. hole in mast arm and install plastic split bushing for cable entrance.

SIGNAL STANDARD DETAIL CHART

STD. NO.	FIELD LOCATION					TYPE	MAST ARM LENGTH (FT)	MOUNTING HEIGHT (FT)		SIGNAL MAST ARM DATA																	LUMINAIRE ARM (FT)	POLE ATTACHMENT POINT ANGLES (deg)									FOUNDATION DEPTH (FT) 3'-0" ROUND		MAST ARM MOUNTED SIGNS
										OFFSET DISTANCES (FT) (Z) POLE ℄ TO ATTACHMENT POINT)									WINDLOAD AREAS (FT²) (X)(Y)								(X)(Y)(Z) TOTAL (FT³)													
	STATION	OFFSET	LT.	RT.	POA			A1	A2	B1	B2	B3	B4	B5	B6	B9	B10	B11	B1	B2	B3	B4	B6	B9	B10	B11		C	D	E1	E2	F	G1	G2	H	I1	I2	ALT. 1	ALT. 2	
1	10+24.39	37.7'		X	354°	III	40	20.0	30	40				34	28	16	14		11.6				9.2	9.2	5.0		1,000	14	0	0		315	90	180	135	0	270	9	11	B10: R3-5R (24" X 30")
2	9+73.06	38.3'		X	95°	III	20	20.0	30	20	17			16	12				9.2	5.0			9.2				583	14	0	0		315	90	180	135	0	270	8	8	B2: R10-12 (24" X 30")
3	9+60.52	45.4'	X		0°	III	45	20.0	30	45				39	33	24	22	8	11.6				9.2	9.2	5.0	15.0	1,324	18	0	0		315	90	180	135	0	270	9	11	B10: R3-5R (24" X 30") B11: KLEMGARD AVE (18" X VAR)
4	10+26.47	43.1'	X		85°	III	25	20.0	30	25	22				17			8	9.2	5.0			9.2			15.0	664	18	0	0		315	90	180	135	0	270	8	8	B2: R10-12 (24" X 30") B11: BISHOP BLVD (18" X VAR)

No.	Date	By	Ckd.	Appr.	Revisions

Drawn	CJR	04/2014
Designed	CJR	04/2014
Checked By	CJR	04/2014

CHRISTOPHER J. CORNELL, STATE OF WASHINGTON, 34850, REGISTERED PROFESSIONAL ENGINEER

MORRISON MAIERLE, INC. ENGINEERS·SURVEYORS·PLANNERS·SCIENTISTS
PO BOX 30097
SPOKANE, WA 99223
(509) 991-8684

CITY OF PULLMAN, WASHINGTON
ENGINEERING DIVISION

SCALE
HORIZ. NTS
VERT. N/A

KLEMGARD AVE. AND BISHOP BLVD.

TRAFFIC SIGNAL POLE SCHEDULE

GENERAL

SHEET T4

11031P-.dwg

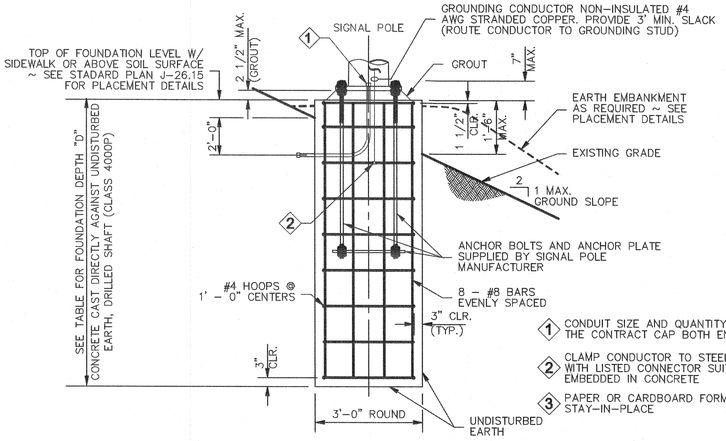

FOUNDATION REINFORCEMENT DETAIL

CONCRETE CAST DIRECTLY AGAINST UNDISTURBED EARTH, DRILLED SHAFT

N.T.S.

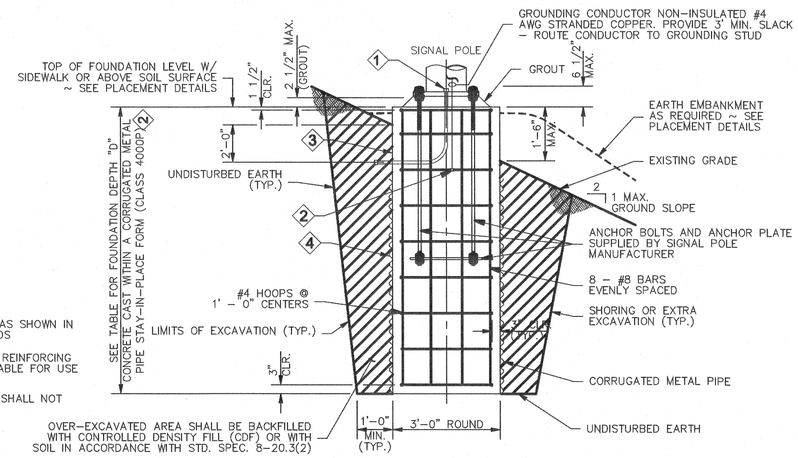

FOUNDATION REINFORCEMENT AND BACKFILL DETAIL

4 CONCRETE CAST WITHIN A CORRUGATED METAL PIPE STAY-IN-PLACE FORM N.T.S.

CONSTRUCTION NOTES

1. THIS STRUCTURE HAS BEEN DESIGNED ACCORDING TO THE FIFTH EDITION 2006 AASHTO STANDARD SPECIFICATIONS FOR STRUCTURAL SUPPORTS FOR HIGHWAY SIGNS, LUMINAIRES AND TRAFFIC SIGNALS. BASIC WIND VELOCITY IS 60 MPH, DESIGN LIFE/RECURRENCE INTERVAL 50 YEARS, AND FATIGUE CATEGORY III.
2. FOUNDATIONS ARE DESIGNED FOR TYPE II, ILL, AND SD SIGNAL STANDARDS WITH A MAXIMUM MAST ARM LENGTH OF 65'.
3. FOUNDATIONS ARE DESIGNED FOR SINGLE MAST ARM STANDARDS AND DOUBLE MAST ARM STANDARDS WITH 90° BETWEEN ARMS.
4. SPECIAL FOUNDATION DESIGN IS REQUIRED FOR DOUBLE ARM STANDARDS WHERE THE ANGLE BETWEEN MAST ARMS IS OTHER THAN 90°. FOR DOUBLE MAST ARM STANDARDS WITH 90° BETWEEN ARMS, USE LARGER XYZ VALUE FOR FOUNDATION DEPTH SELECTION.
5. FOUNDATIONS NOT WITHIN THE PARAMETERS OF THIS STANDARD REQUIRE SPECIAL DESIGN. CONTACT THE WSDOT BRIDGE AND STRUCTURES OFFICE THROUGH THE ENGINEER FOR SPECIAL FOUNDATION DESIGNS.
6. FOUNDATIONS CONSTRUCTED WITHIN ECOLOGY EMBANKMENTS SHALL BE INCREASED IN DEPTH BY THE DEPTH OF THE ECOLOGY EMBANKMENT.
7. THE TOP 2 FEET OF THE FOUNDATION SHALL USE A SMOOTH FORM (SUCH AS PAPER OR CARDBOARD). AFTER THE CONCRETE HAS CURED, THIS ENTIRE FORM SHALL BE REMOVED.
8. FOR DESIGN PARAMETERS BETWEEN THE VALUES LISTED IN TABLE, DEPTH REQUIREMENTS MAY BE INTERPOLATED BETWEEN THE VALUES PROVIDED.
9. INSTALL SIGNAL FOUNDATION IDENTIFICATION TAG. SEE STANDARD PLAN J-26.15 FOR DETAILS.

ALTERNATE #1
FOUNDATION DEPTH "D" TABLE

STD. NO.	FIELD LOCATION					TYPE	(X)(Y)(Z) TOTAL (FT³)	DEPTH (FT)	
	STATION	OFFSET	LT.	RT.	POA			ALTERNATE #1	ALTERNATE #2
1	10+24.39	37.7'		X	354°	III	1,036	3' DIA. X 9'-0"	3' DIA. X 11'-0"
2	9+73.06	38.3'		X	95°	III	498	3' DIA. X 8'-0"	3' DIA. X 8'-0"
3	9+60.52	45.4'	X		0°	III	1,214	3' DIA. X 9'-0"	3' DIA. X 11'-0"
4	10+26.47	43.1'	X		85°	III	554	3' DIA. X 8'-0"	3' DIA. X 8'-0"

NOTE: FOUNDATION DEPTH BASED UPON CITY OF PULLMAN DECISION TO USE ALLOWABLE BEARING PRESSURE = 1500 AND ϕ = 34° (MIN.)

ALTERNATE #2

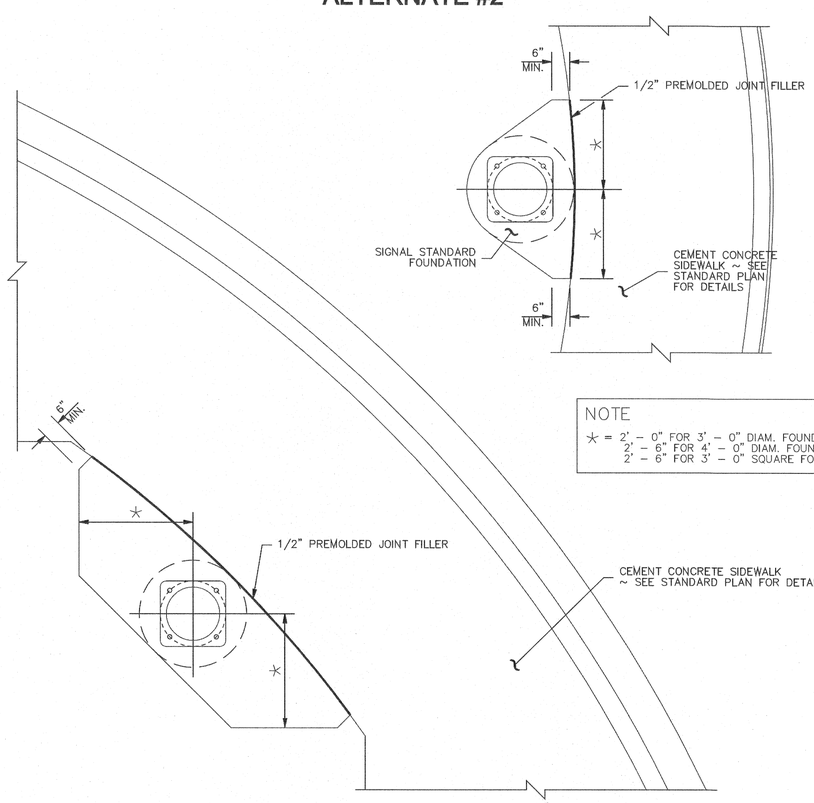

ALTERNATE #2 – CONSTRUCTION METHOD
METAL (SUBSURFACE) FORM REQUIRED

WHEN THE EXISTING SOIL WILL NOT RETAIN A VERTICAL FACE, OVER-EXCAVATE THE FOUNDATION AREA AND INSTALL A 36" OR 48" DIAMETER CORRUGATED METAL (PIPE) FORM. THE TOP OF THE CORRUGATED METAL FORM SHALL TERMINATE 1 FOOT BELOW FINAL GRADE. CONTINUE FORMING TO FULL HEIGHT USING PAPER OR CARDBOARD FORM TO ACHIEVE A SMOOTH FINISH ON FINAL EXPOSED CEMENT CONCRETE. SUPPORT THE FORM AS NECESSARY TO REMAIN PLUMB.

PLACE THE CONCRETE FOUNDATION.

AFTER CONCRETE HAS CURED, REMOVE THE ENTIRE PAPER OR CARDBOARD FORM PORTION. BACKFILL WITH CONTROLLED-DENSITY FILL OR COMPACTED BORROW IN ACCORDANCE WITH STANDARD SPECIFICATION 8-20.3(2).

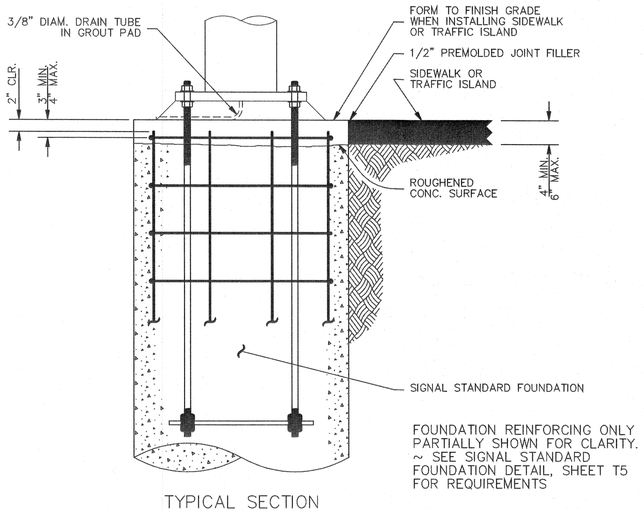

TYPICAL SECTION

SIDEWALK AND TRAFFIC ISLAND WITH SIGNAL

N.T.S.

FOUNDATION OUTSIDE THE SIDEWALK SECTION

N.T.S.

No.	Date	By	Ckd.	Appr.	Revisions

Drawn	CJR	04/2014
Designed	CJR	04/2014
Checked By	CJR	04/2014

CHRISTOPHER J. SMITH, STATE OF WASHINGTON, 34880, REGISTERED PROFESSIONAL ENGINEER

MORRISON MAIERLE, INC. ENGINEERS·SURVEYORS·PLANNERS·SCIENTISTS
PO BOX 30097
SPOKANE, WA 99223
(509) 991-8684

CITY OF PULLMAN, WASHINGTON
ENGINEERING DIVISION

SCALE
HORIZ. NTS
VERT. N/A

KLEMGARD AVE. AND BISHOP BLVD.

POLE FOUNDATION DETAILS

GENERAL
SHEET T5

11031P-.dwg